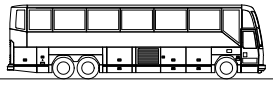

WIRING DIAGRAM

PREVOST H3-41 & H3-45 BUS

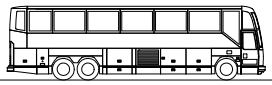

REFERENCE: STANDARD - MODEL 96	NO: D060869
EFF. W/ OC# N/A PRIOR TO / OC#	DR. MARTIN LAFLAMME — DATE: 95-07-03
EFF. W/ VEH.# T1300 PRIOR TO / VEH.#	CK. ROCH CHAMPAGNE — APPR. ROLAND LAPOINTE

REV.	DATE	DESCRIPTION	PAGE	BY	CK.	APPR.
001	95-07-20	NEW OPTION, POWER 12V OUTLET	A, 2, 3, 20	MH	RC	RL
002	95-08-15	NEW DASH LTS RHEOSTAT EFF.W/T1325 OC#95013	C, G3,14	MH	RC	RL
		JACOB & RETARDER SWITCH RELOCATED ON L.H. CONSOLE EFF.W/T1325 OC#95013	25	MH	RC	RL
003	95-08-21	NEW SPEAKER EFF.W/T1331 OC#95037	C	MH	RC	RL
004	95-08-21	NEW OPTION, DIGITAL CLOCK	A, G4, 4, 7, 9, 20	MH	RC	RL
005	95-09-07	KNEELING ALARM EFF.W/T1347 OC#95060	24	MH	RC	RL
006	95-10-05	CB18 IGNITION FEED CHANGED EFF. W/T1347	F, 1, 4	S.G.	RC	RL
007	95-10-23	ENTRANCE DOOR SEDAN EFF. W/T1368 OC#95089 PAGES: C, E 2/4, G 3/4, I, 22	<--- SEE	S.G.	RC	RL
008	95-10-30	FAN CLUTCH ACTIVITED WITH RETARDER EFF.W/T1359 OC#95076	C, G4, H, J, 1, 4, 8, 25	MH	RC	RL
009	95-11-17	UPDATE PAGES: 19; TEMP. CTR. WIRE COLOR , 29; VCR SWITCH CONNECTION	<--- SEE	S.G.	RC	RL
010	95-11-29	WORLD TRANSM. HARNESS EFF. W/T1417 OC#95124	C, G4, 6	MH	RC	RL
011	95-11-30	UPDATE PAGES: 31 2/2 (BREAKER CB80, 24VI UPDATED TO 12VI)	<--- SEE	MH	RC	RL
		33 (PRE-HEAT ESPAR, WIRE COLOR UPDATED)				
		G3 (CONNECTORS C395 & C360 REMOVED)				
012	95-12-15	NEW OPTION, WHEELCHAIR LIFT RICON 9 EFF.W/T1423 OC#95072	A, C, D, F, 35	MH	RC	RL
012	95-12-20	UPDATE WHEELCHAIR LIFT RICON 9 EFF.W/T1423	13, 35	MH	RC	RL
013	96-02-13	NEW CONNECTOR, RR START SW. JCT. BOX EFF.W/T1475 OC#95117	C, D, G3, 4	MH	RC	RL
014	96-02-15	NEW SOUND SYSTEM (REI) EFF.W/T1429, T1445, T1446, T1452 OC#95097	<--- SEE	R.C.	RC	RL
		PAGES: B, C, E, F, G, H, I, 1, 2, 3, 4, 28, 29				
015	96-02-16	NEW OPTION, INTERCOM	A, 34	S.G.	RC	RL
016	96-03-08	WATER PUMP, START CONDITION CHANGED EFF.W/T1462 OC#95159	C, 18	MH	RC	RL
017	96-04-01	UPDATE	1,22,28,30,35	MH	RC	RL
018	96-04-10	NEW SPEEDO & TACHY. EFF.W/T1531 OC#96014	C, G3, 21	MH	RC	RL
019	96-04-10	UPDATE	E3,E4,F,G2,G4,H,I	MH	RC	RL
020	96-04-17	UPDATE WEELCHAIR LIFT DOOR ALARM OC#96061	H,23	S.G.	RC	RL

PREVOST H3-41 & H3-45 BUS

NO: D060869 p. 2/2

REV.	DATE	DESCRIPTION	PAGE	BY	CK.	APPR.
021	96-04-22	REAR SECTION REVIEW EFF.W/T1584 OC#96029				
		PAGES: A, C, D, E2, E3, E4, F, G1, G2, G3, G4, H, I, J, L, 1 1/2, 1 2/2, 2, 3, 4, 5, 6, 7, 8, 9, 10,	<--- SEE	R.C.	RC	RL
		11, 13, 15, 17, 18, 19, 21, 22, 23, 24, 25, 32, 33, 34, 35,				
022	96-05-16	FRESH AIR SENSOR REPLACED BY RESISTOR RS21 EFF.W/T1573 OC#96070	H, 19	R.C.	RC	RL
023	96-05-17	UPDATE PAGES: H, 5 (DIODE D6 ADDED)	<--- SEE	R.C.	RC	RL
		10 (FLASHER UNIT COLOR WIRES ADDED)				
		15 (GENERAL LTS BALLAST COLOR WIRES ADDED)				
024	96-06-23	ALARM JCT. BOX NEW ARANGEMENT EFF.W/T1612 OC#96040	C	MH	RC	RL
025	96-10-18	EVAPORATOR MOTOR SPEED VARIATOR CHANGED EFF.W/V1693 OC#96101	C, G, 19	S.G.	RC	RL
026	96-10-21	A/C LO PRESSURE THERMOSTAT ADDED EFF.W/V1702 OC#96097	18	S.G.	RC	RL
027	96-11-15	UPDATE PAGES:	H, 15, 24, 26¼	MH	RC	RL
028	96-11-18	ENTRANCE DOOR, CYLINDER READ SW. EFF.W/V1717 OC#96166	C, 22	MH	RC	RL
029	98-02	CUT-OUT COMPRESSOR WITH THERMOSTAT	P 18			
030	98-04	SPECIAL HARRANG T-1413	P.18,19			
031	98-09	IMPROVE A/C SYSTEM WARRANTY BULLETIN 98-33	P.18,19			
032	98-12	UPDATE WB98-33	P.18			

INDEX

A
A/C AND HEAT SYSTEM P. 18
AIR DRYER P. 8
ALARM AND SIGNAL P. 7
ABS P. 27
ARRANGEMENT - CABLE P. B
ARRANGEMENT - HARNESS P. C
ARRANGEMENT - SPARE WIRE P. D

B
BACK-UP ALARM P. 11
BACK-UP MONITOR P. 34

C
CHARGING SYSTEM P. 4
CIGAR LIGHTER P. 20
CODE - CIRCUIT NUMBER P. E
CODE - CIRCUIT BREAKER P. F
CODE - CONNECTOR P. G
CODE - DIODE P. H
CODE - RELAY P. I
CODE - RESISTOR P. J
CODE - WIRING KEY P. K
CRUISE CONTROL - D.D.E.C. P. 5

D
D.D.E.C. III P. 5
DIGITAL CLOCK P. 20
DISTRIBUTION 12V P. 2
DISTRIBUTION 24V P. 1
DRIVER'S WINDOW LIFTER P. 20

E
ENGINE BLOCK HEATER P. 17
ENGINE BRAKE SYSTEM P. 25
ENGINE CONTROL P. 4
ENTRANCE DOOR (SEDAN) P. 22
ETHER COLD START P. 8
EXTERIOR LIGHTING P. 9

F
FAN CLUTCH-RADIATOR P. 8
FAST IDLE P. 5
FRONT DESTINATION SIGN P. 23
FUEL (LO) WARNING LT. P. 7
FUEL WATER FILTER P. 8
FUEL PRIME PUMP P. 17

G
GALLEY ACCESSORIES P. 30
GROUND SYSTEM P. 3

H
HIGH BUOY P. 24
HOSTESS CHIME P. 17

I
INTERIOR LIGHTING P. 13

K
KNEELING SYSTEM P. 24

L
LAVATORY P. 23
LOW BUOY P. 24
LUGGAGE DOOR LOCK P. 25

M
MIRROR-RR VIEW ADJUST. & HEATED P. 31

P
PARKING BRAKE SWITCH P. 8
PASSENGER CHIME P. 17
POWER 12V OUTLET P. 20
PRODRIVER P. 8

R
RETARDER P. 25

S
SOUND SYSTEM P. 26
SPEEDOMETER (VDO) P. 21
SUN VISOR P. 20

T
TACHOGRAPH-ELECTRONIC P. 21
TACHOMETER (VDO) P. 21
THERMOMETER-DIGITAL P. 24
TRANSMISSION MANUAL P. 28
TRANSMISSION WORLD P. 6

V
VIDEO SYSTEM & TV RECEIVER P. 29

W
WATER HEATER PRE-HEAT P. 33
WATER TANK HEATER LAVATORY P. 17
WHEELCHAIR LIFT SYSTEM P. 32
WINDSHIELD(UP)-DEFROSTER P. 28
WINDSHIELD(UP)-HEATED P. 28
WIPER & WASHER P. 12

INDEX

A
A/C AND HEAT SYSTEM P. 18
AIR DRYER P. 8
ALARM AND SIGNAL P. 7
ABS P. 27
ARRANGEMENT - CABLE P. B
ARRANGEMENT - HARNESS P. C
ARRANGEMENT - SPARE WIRE P. D

B
BACK-UP ALARM P. 11
BACK-UP MONITOR P. 34

C
CHARGING SYSTEM P. 4
CIGAR LIGHTER P. 20
CODE - CIRCUIT NUMBER P. E
CODE - CIRCUIT BREAKER P. F
CODE - CONNECTOR P. G
CODE - DIODE P. H
CODE - RELAY P. I
CODE - RESISTOR P. J
CODE - WIRING KEY P. K
CRUISE CONTROL - D.D.E.C. P. 5

D
D.D.E.C. III P. 5
DIGITAL CLOCK P. 20
DISTRIBUTION 12V P. 2
DISTRIBUTION 24V P. 1
DRIVER'S WINDOW LIFTER P. 20

E
ENGINE BLOCK HEATER P. 17
ENGINE BRAKE SYSTEM P. 25
ENGINE CONTROL P. 4
ENTRANCE DOOR (SEDAN) P. 22
ETHER COLD START P. 8
EXTERIOR LIGHTING P. 9

F
FAN CLUTCH-RADIATOR P. 8
FAST IDLE P. 5
FRONT DESTINATION SIGN P. 23
FUEL (LO) WARNING LT. P. 7
FUEL WATER FILTER P. 8
FUEL PRIME PUMP P. 17

G
GALLEY ACCESSORIES P. 30
GROUND SYSTEM P. 3

H
HIGH BUOY P. 24
HOSTESS CHIME P. 17

I
INTERIOR LIGHTING P. 13
INTERCOM P. 34

K
KNEELING SYSTEM P. 24

L
LAVATORY P. 23
LOW BUOY P. 24
LUGGAGE DOOR LOCK P. 25

M
MIRROR-RR VIEW ADJUST. & HEATED P. 31

P
PARKING BRAKE SWITCH P. 8
PASSENGER CHIME P. 17
POWER 12V OUTLET P. 20
PRODRIVER P. 8

R
RETARDER P. 25

S
SOUND SYSTEM P. 26
SPEEDOMETER (VDO) P. 21
SUN VISOR P. 20

T
TACHOGRAPH-ELECTRONIC P. 21
TACHOMETER (VDO) P. 21
THERMOMETER-DIGITAL P. 24
TRANSMISSION MANUAL P. 28
TRANSMISSION WORLD P. 6

V
VIDEO SYSTEM & TV RECEIVER P. 29

W
WATER HEATER PRE-HEAT P. 33
WATER TANK HEATER LAVATORY P. 17
WHEELCHAIR LIFT SYS. RIC-9 P. 35
WHEELCHAIR LIFT SYS. STEW. P. 32
WINDSHIELD(UP)-DEFROSTER P. 28
WINDSHIELD(UP)-HEATED P. 28
WIPER & WASHER P. 12

INDEX

A
A/C AND HEAT SYSTEM P. 18
AIR DRYER P. 8
ALARM AND SIGNAL P. 7
ABS P. 27
ARRANGEMENT - CABLE P. B
ARRANGEMENT - HARNESS P. C
ARRANGEMENT - SPARE WIRE P. D

B
BACK-UP ALARM P. 11
BACK-UP MONITOR P. 34

C
CHARGING SYSTEM P. 4
CIGAR LIGHTER P. 20
CODE - CIRCUIT NUMBER P. E
CODE - CIRCUIT BREAKER P. F
CODE - CONNECTOR P. G
CODE - DIODE P. H
CODE - RELAY P. I
CODE - RESISTOR P. J
CODE - WIRING KEY P. K
CODE - FUSE P. L
CRUISE CONTROL - D.D.E.C. P. 5

D
D.D.E.C. III P. 5
DIGITAL CLOCK P. 20
DISTRIBUTION 12V P. 2
DISTRIBUTION 24V P. 1
DRIVER'S WINDOW LIFTER P. 20

E
ENGINE BLOCK HEATER P. 17
ENGINE BRAKE SYSTEM P. 25
ENGINE CONTROL P. 4
ENTRANCE DOOR (SEDAN) P. 22
ETHER COLD START P. 8
EXTERIOR LIGHTING P. 9

F
FAN CLUTCH-RADIATOR P. 8
FAST IDLE P. 5
FRONT DESTINATION SIGN P. 23
FUEL (LO) WARNING LT. P. 7
FUEL WATER FILTER P. 8
FUEL PRIME PUMP P. 17

G
GALLEY ACCESSORIES P. 30
GROUND SYSTEM P. 3

H
HIGH BUOY P. 24
HOSTESS CHIME P. 17

I
INTERIOR LIGHTING P. 13
INTERCOM P. 34

K
KNEELING SYSTEM P. 24

L
LAVATORY P. 23
LOW BUOY P. 24
LUGGAGE DOOR LOCK P. 25

M
MIRROR-RR VIEW ADJUST. & HEATED P. 31

P
PARKING BRAKE SWITCH P. 8
PASSENGER CHIME P. 17
POWER 12V OUTLET P. 20
PRODRIVER P. 8

R
RETARDER P. 25

S
SOUND SYSTEM P. 26
SPEEDOMETER (VDO) P. 21
SUN VISOR P. 20

T
TACHOGRAPH-ELECTRONIC P. 21
TACHOMETER (VDO) P. 21
THERMOMETER-DIGITAL P. 24
TRANSMISSION MANUAL P. 28
TRANSMISSION WORLD P. 6

V
VIDEO SYSTEM & TV RECEIVER P. 29

W
WATER HEATER PRE-HEAT P. 33
WATER TANK HEATER LAVATORY P. 17
WHEELCHAIR LIFT SYS. RIC-9 P. 35
WHEELCHAIR LIFT SYS. STEW. P. 32
WINDSHIELD(UP)-DEFROSTER P. 28
WINDSHIELD(UP)-HEATED P. 28
WIPER & WASHER P. 12

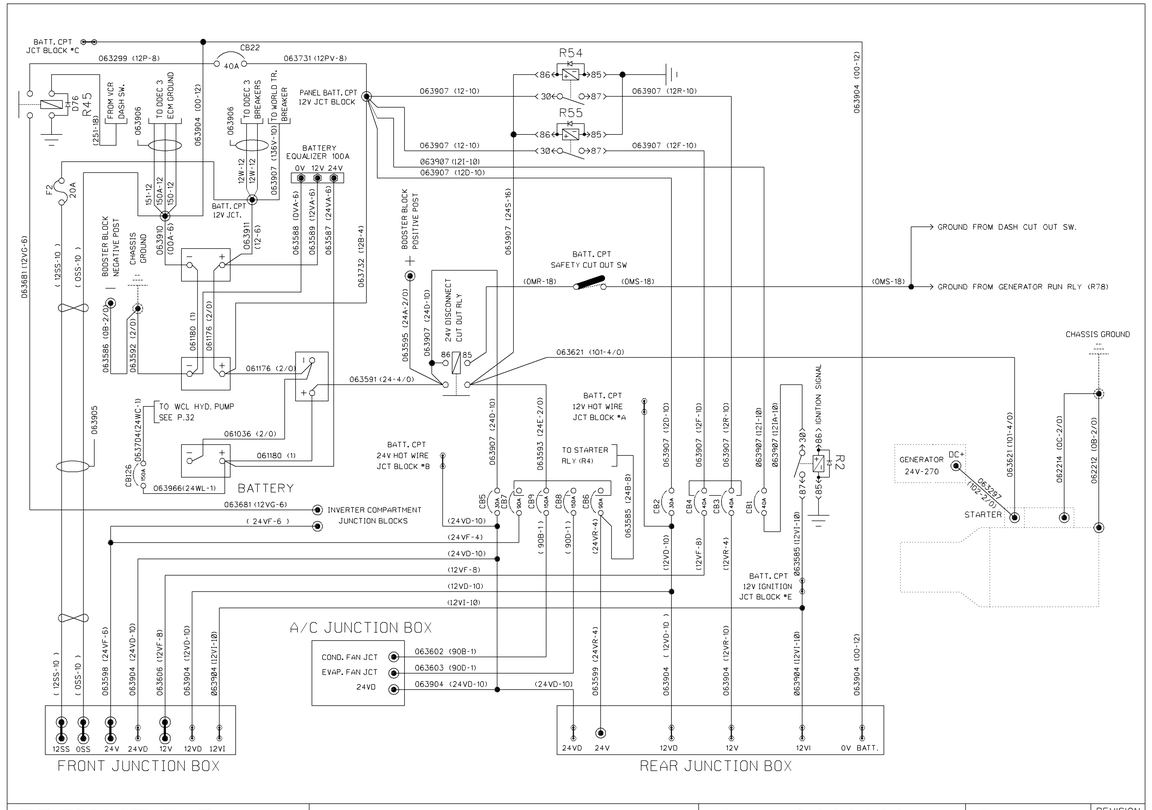

PREVOST CAR inc.	WIRING DIAGRAM	NO: D060869	P. B 1/2	REVISION 000

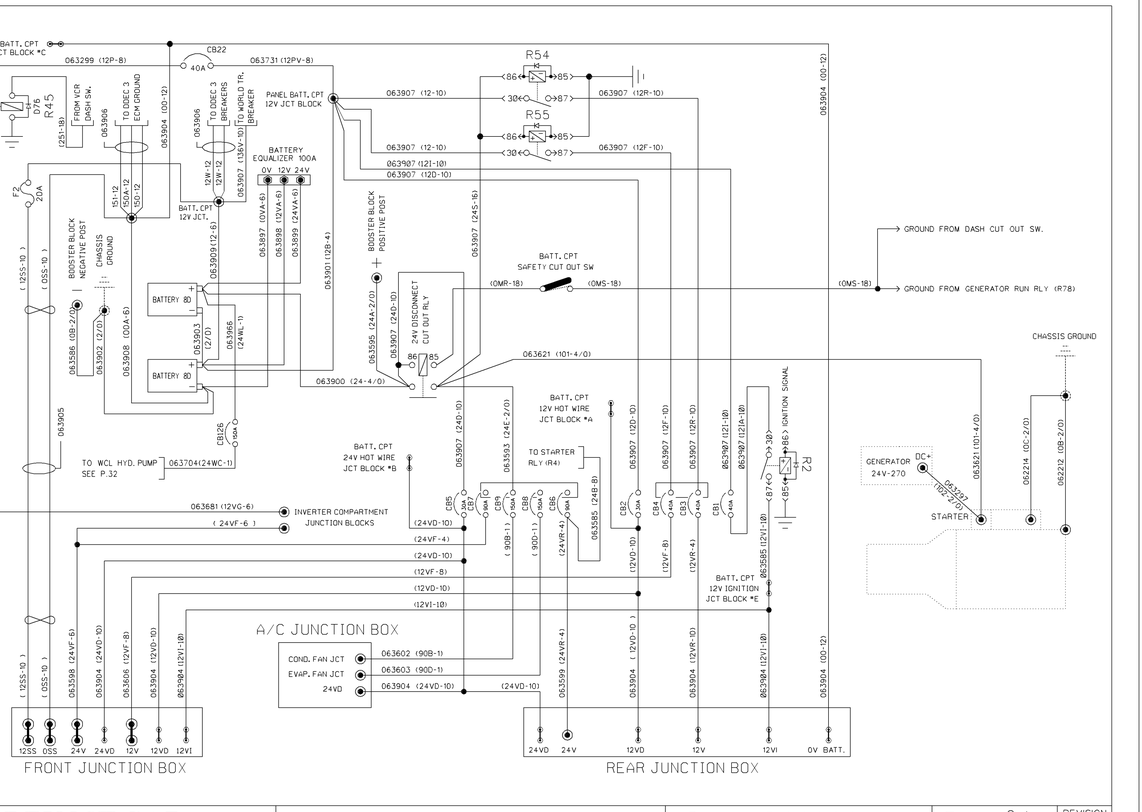

PREVOST CAR inc.	WIRING DIAGRAM	NO: D060869	P. B 2/2	REVISION 000

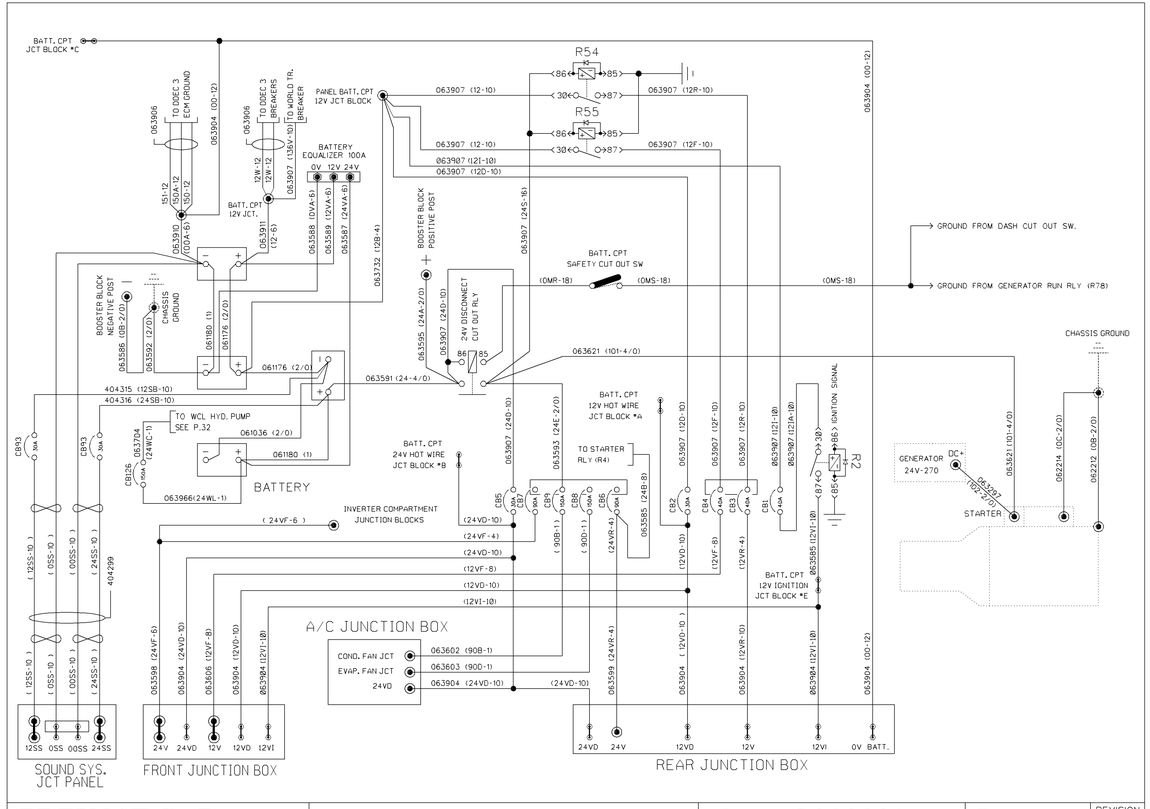

PREVOST CAR inc.	WIRING DIAGRAM	NO: D060869	P. B 1/2	REVISION 014

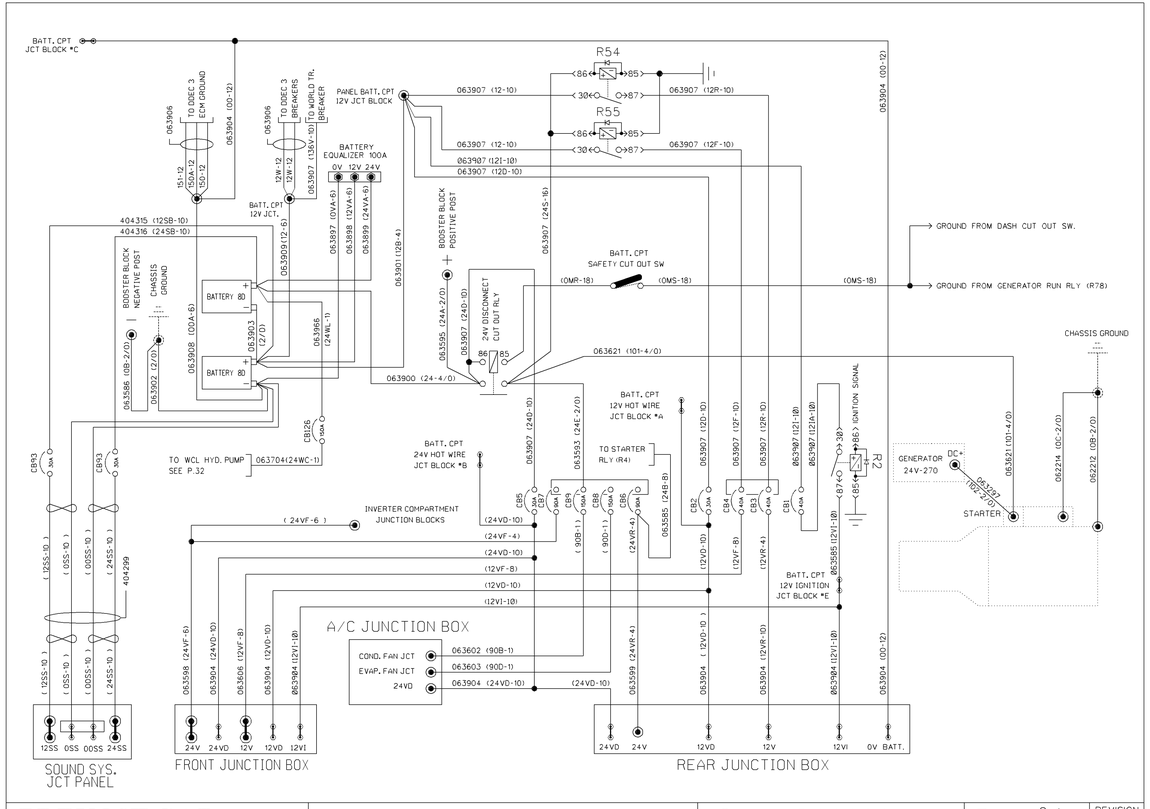

PREVOST CAR inc.	WIRING DIAGRAM	NO: D060869	P. B 2/2	REVISION 014

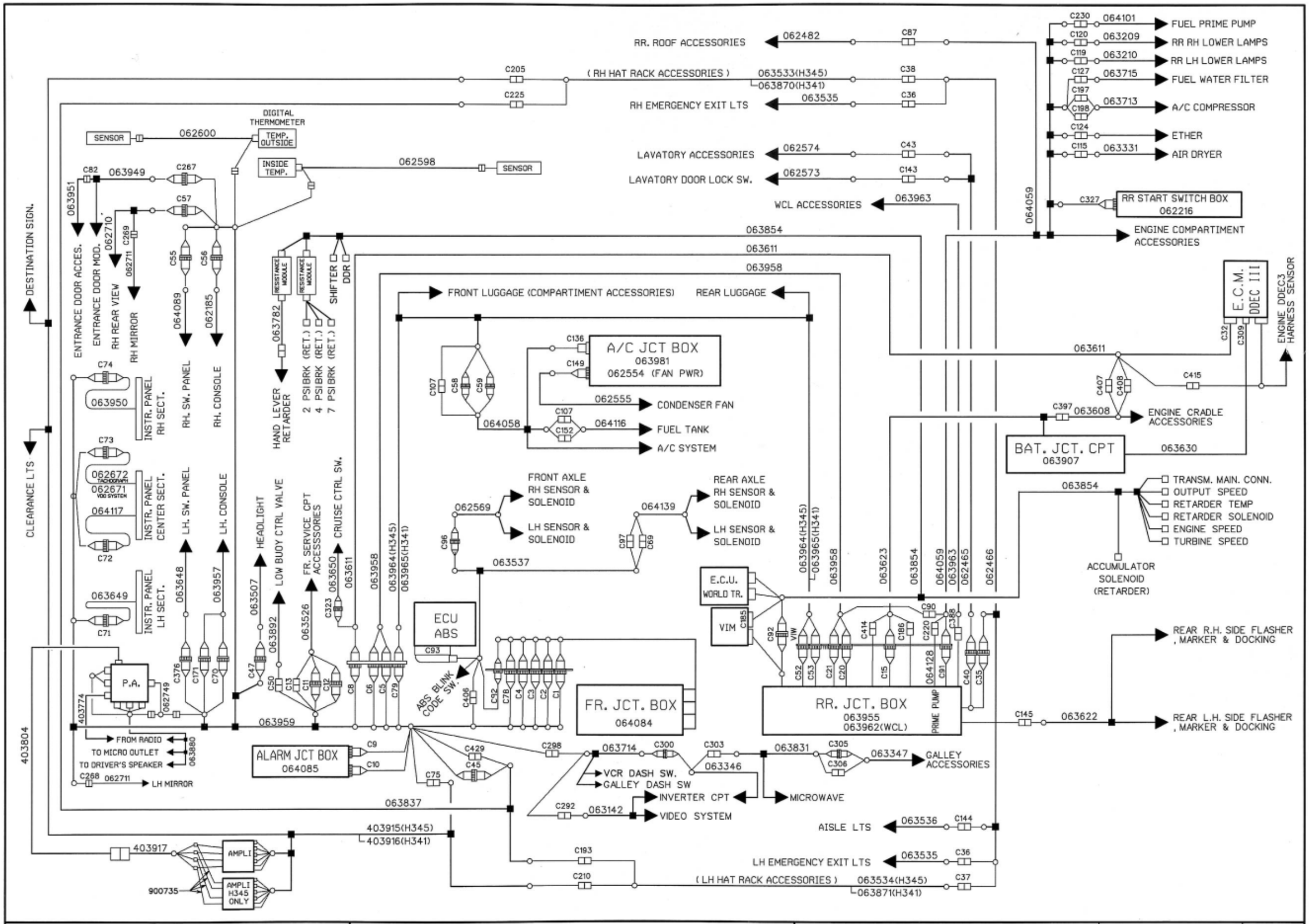

PREVOST CAR inc.	WIRING DIAGRAM	NO: D060869	P. © PRIOR	REVISION 000

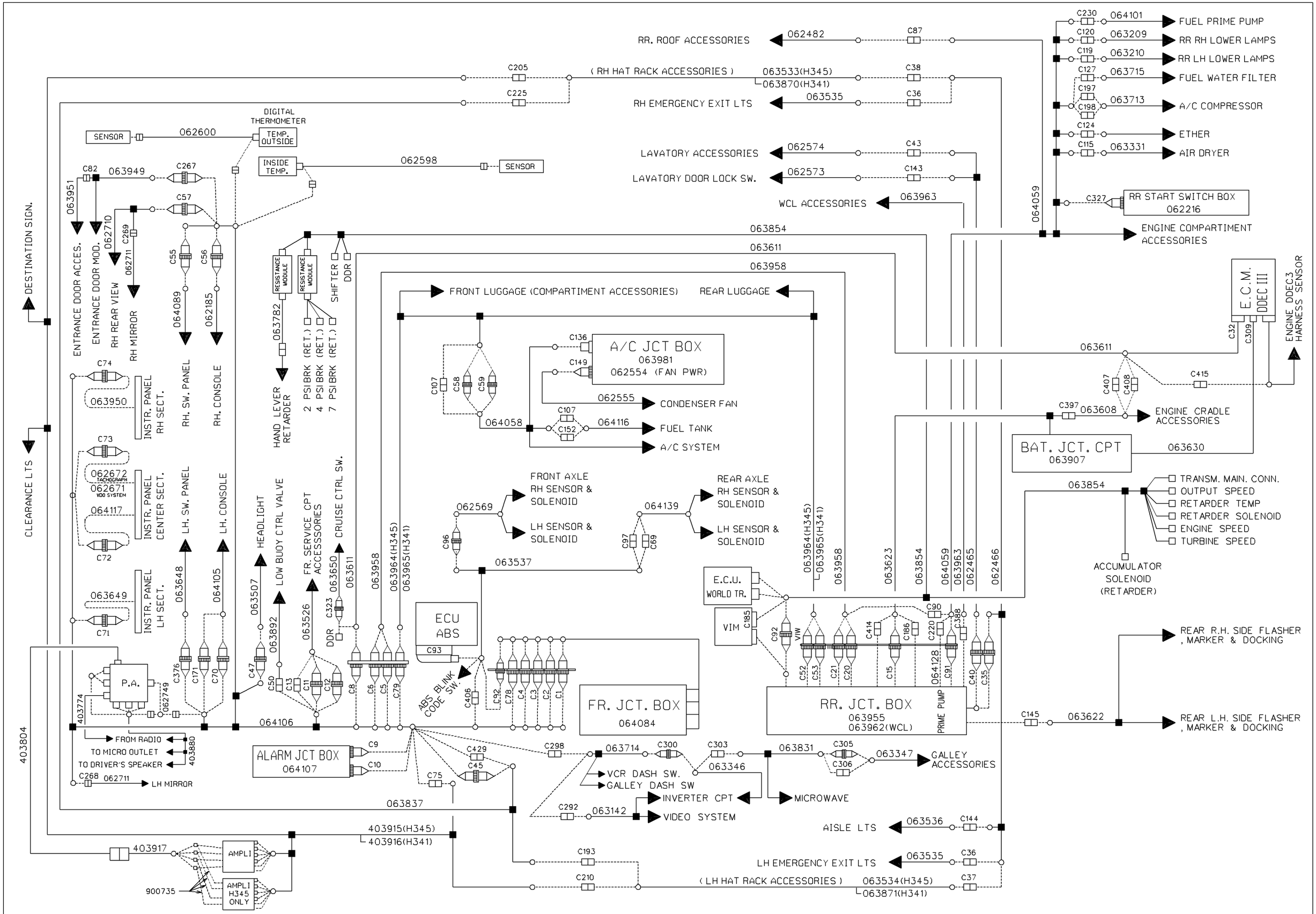

PREVOST CAR inc.	WIRING DIAGRAM	NO: D060869	P. C PRIOR	REVISION 002

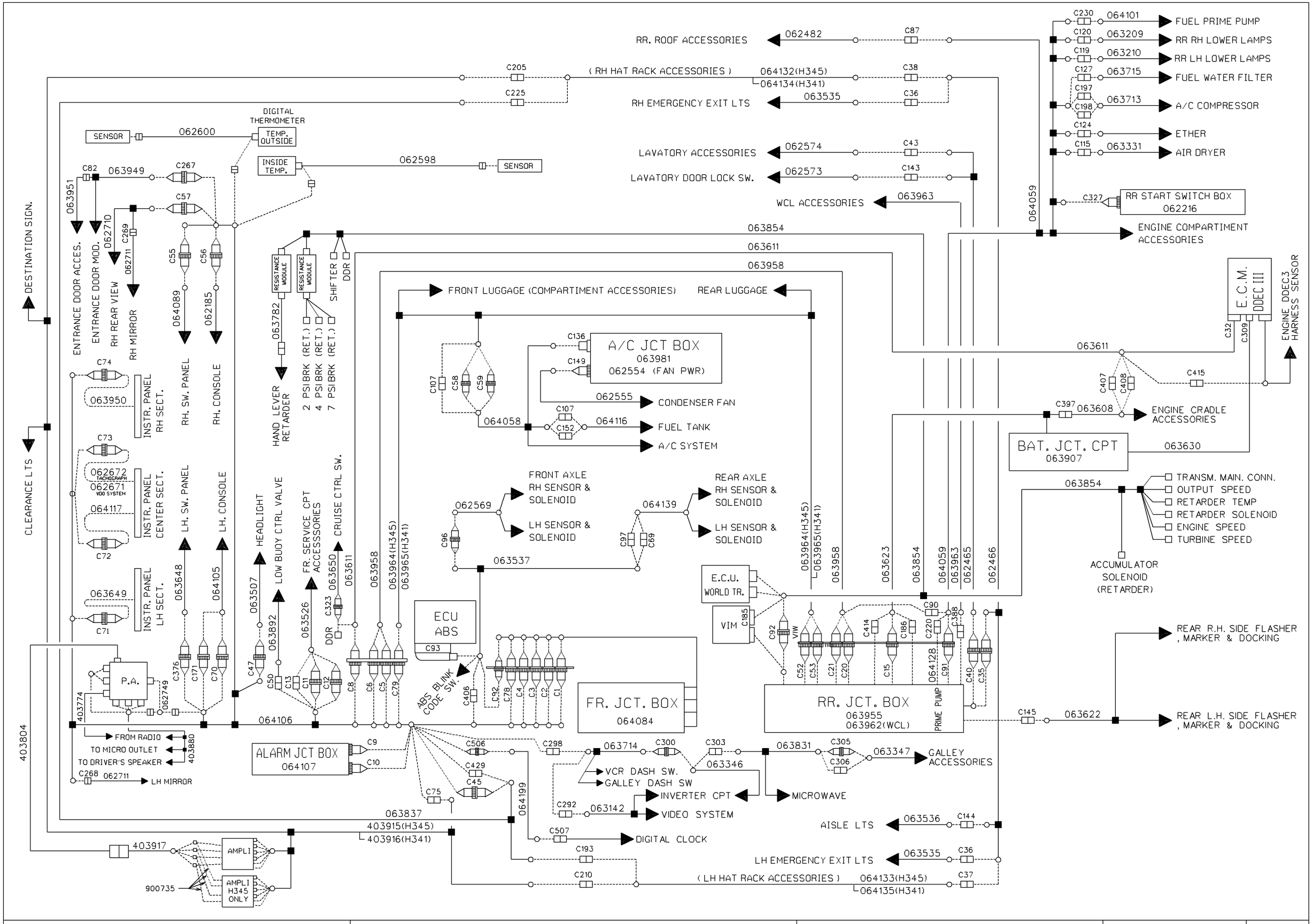

PREVOST CAR inc.	WIRING DIAGRAM	NO: D060869	P. C PRIOR	REVISION 003

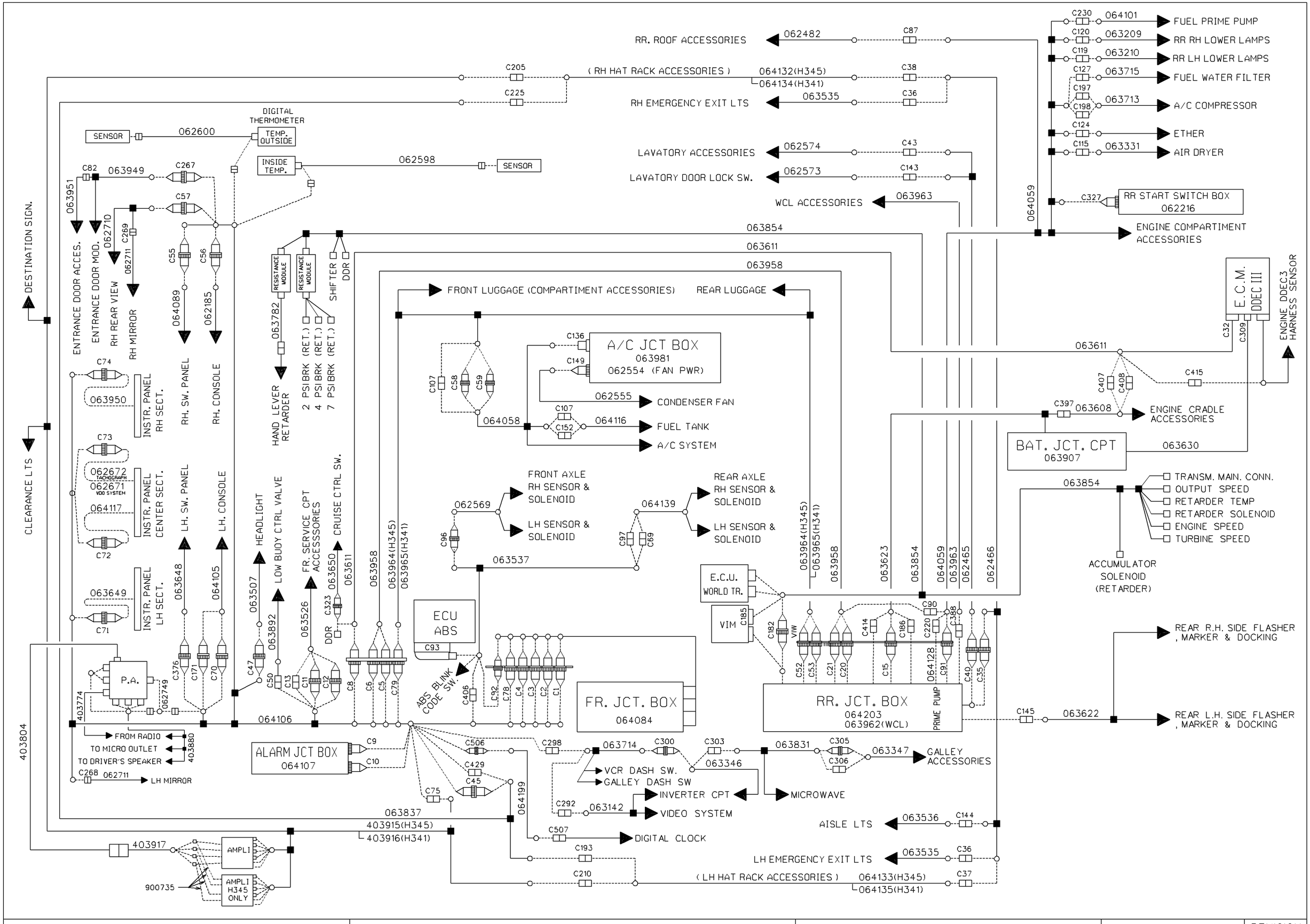

PREVOST CAR inc.	WIRING DIAGRAM	NO: D060869	P. C	REVISION 008

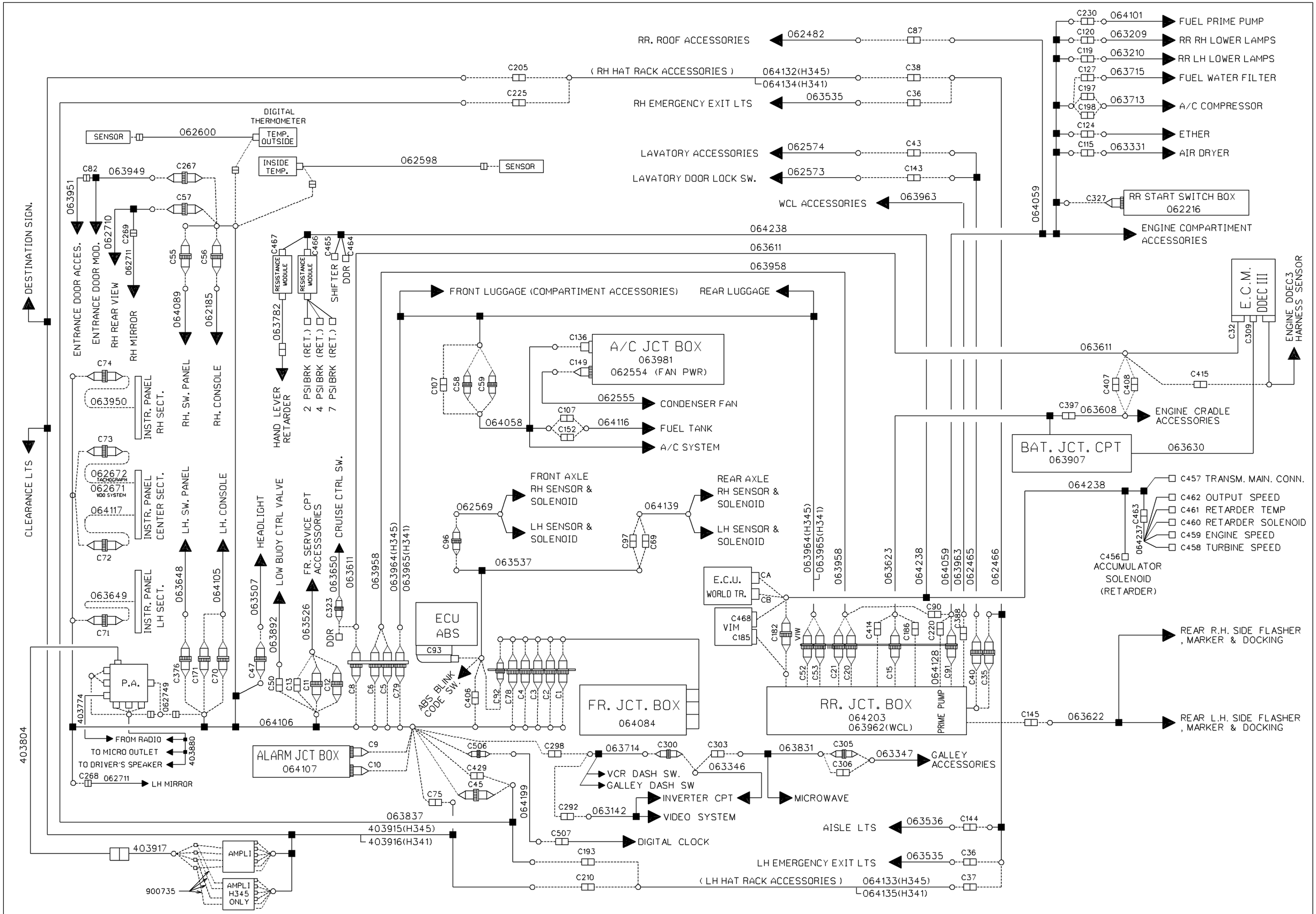

PREVOST CAR inc.	WIRING DIAGRAM	NO: D060869	P. C	REVISION 010

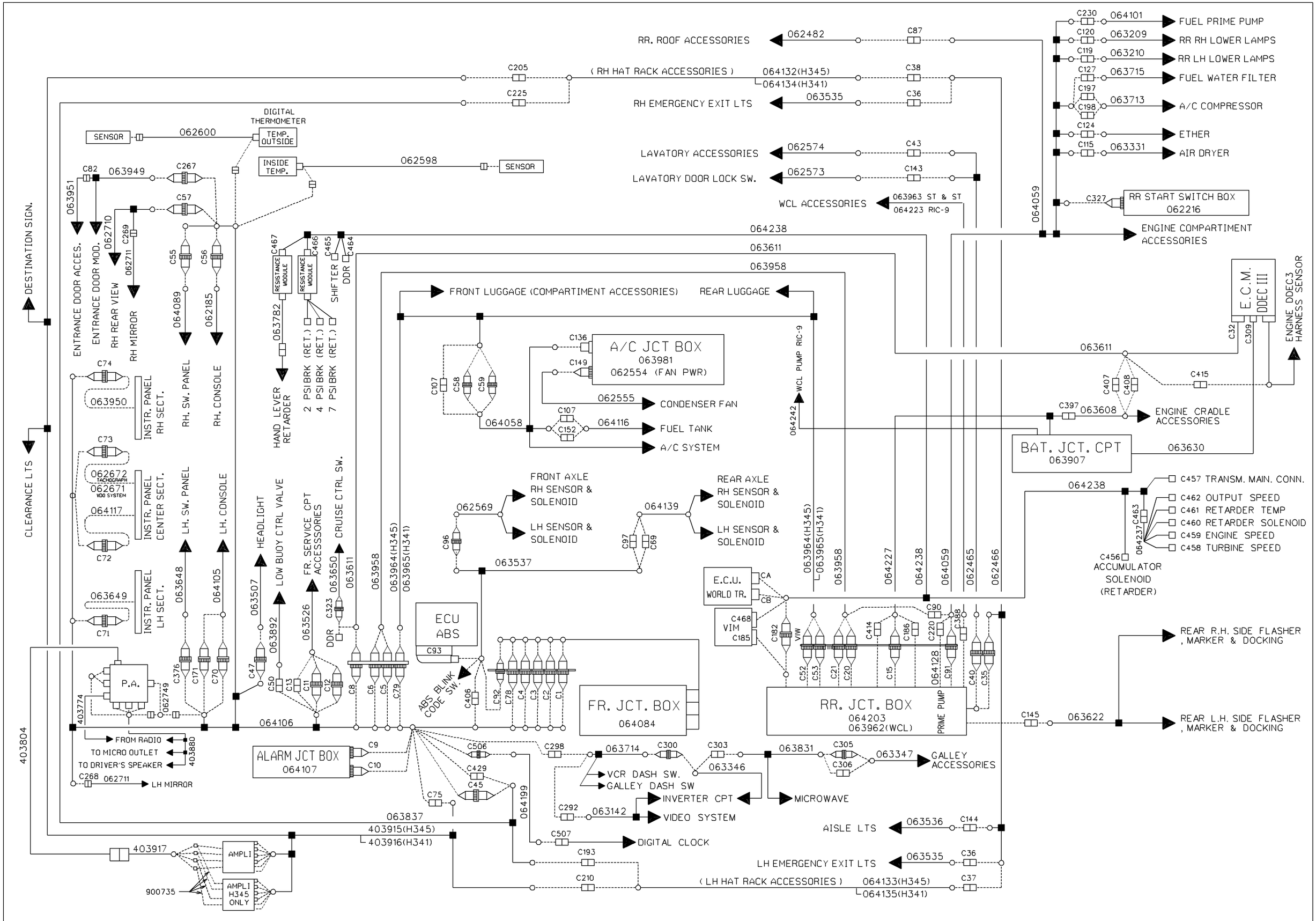

PREVOST CAR inc.	WIRING DIAGRAM	NO: D060869	P. C	REVISION 012

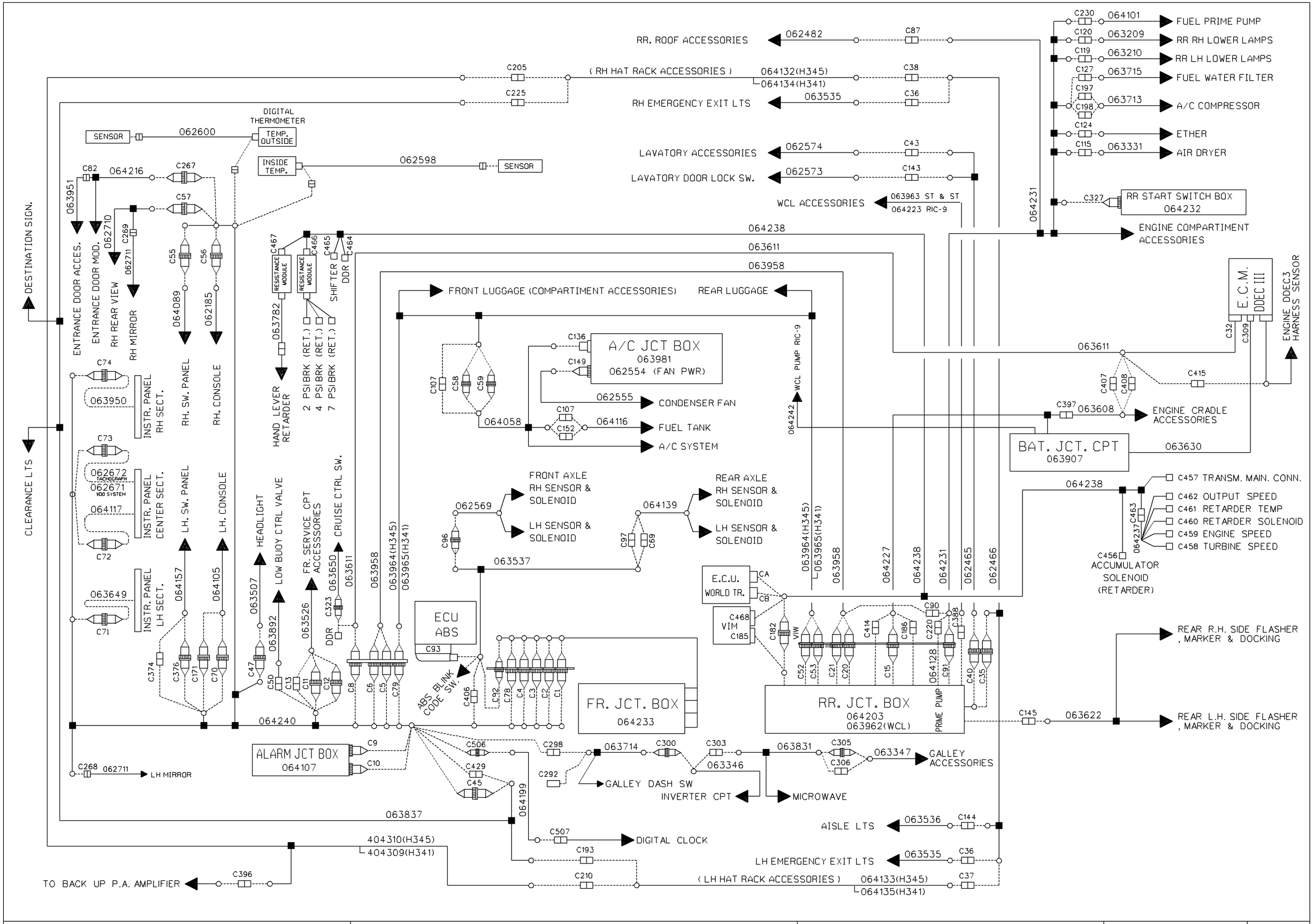

PREVOST CAR inc.	WIRING DIAGRAM	NO: D060869	P. C	REVISION 014

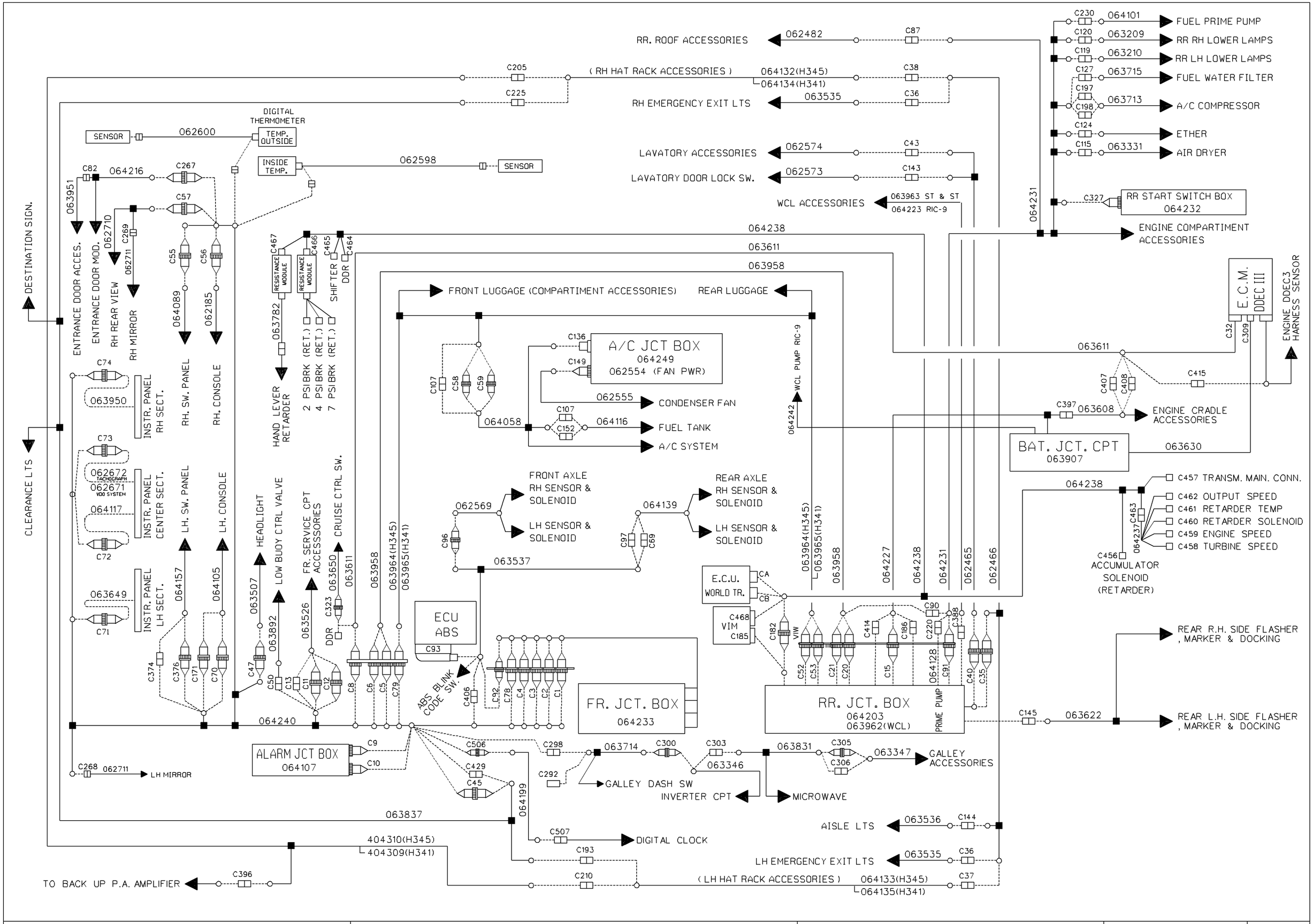

PREVOST CAR inc.	WIRING DIAGRAM	NO: D060869	P. C	REVISION 016

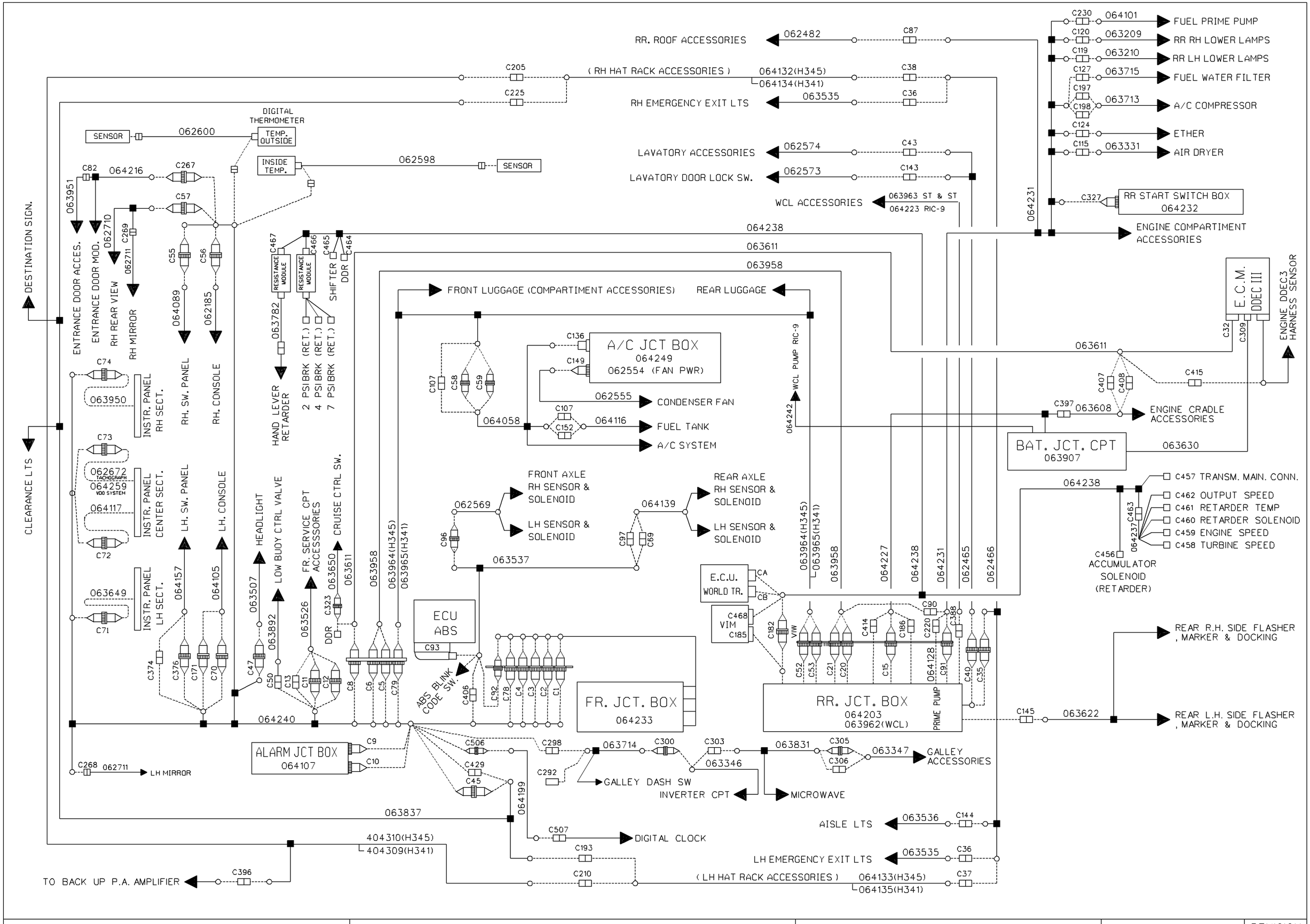

PREVOST CAR inc.	WIRING DIAGRAM	NO: D060869	P. C	REVISION 018

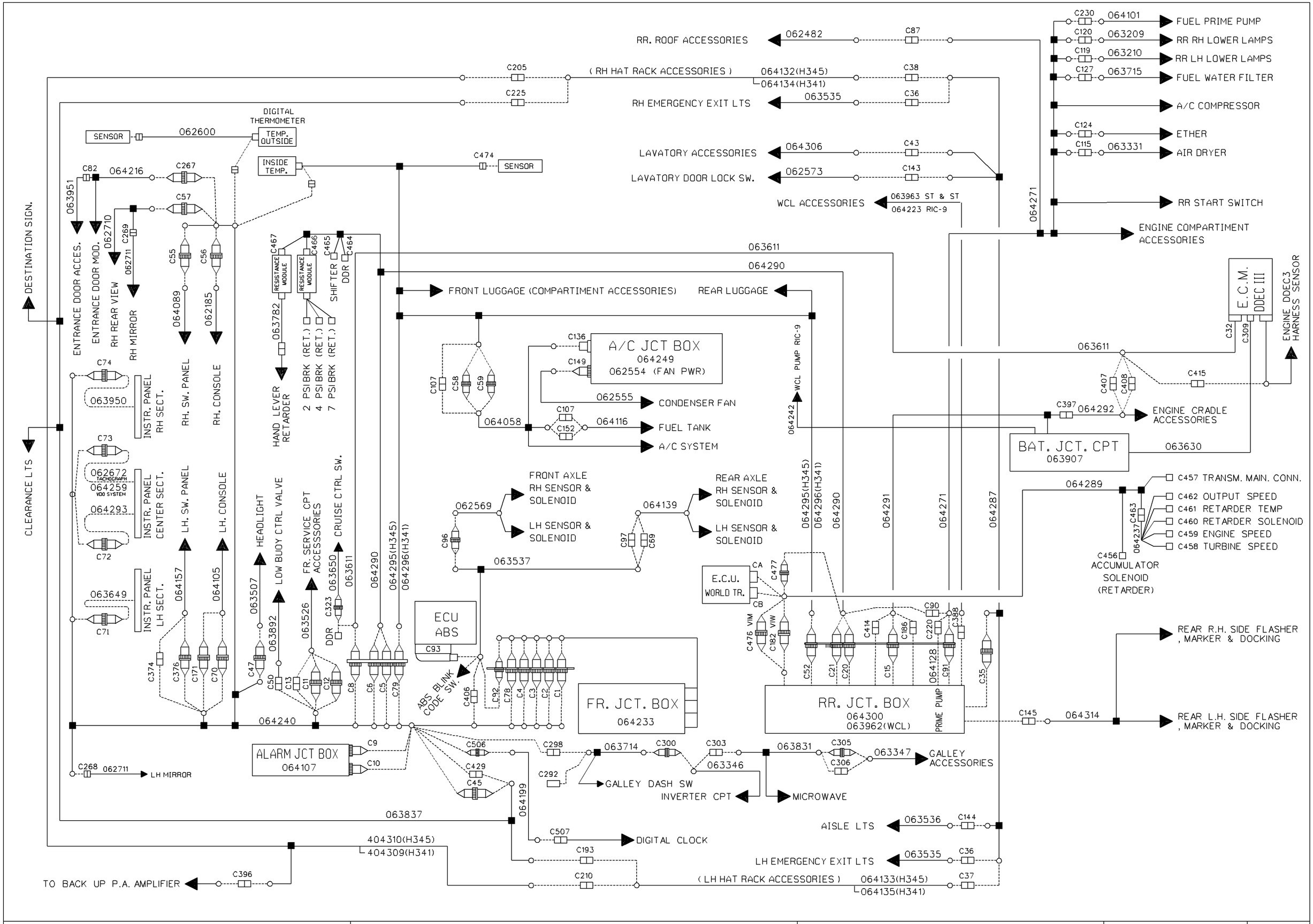

PREVOST CAR inc.	WIRING DIAGRAM	NO: D060869	P. C	REVISION 021

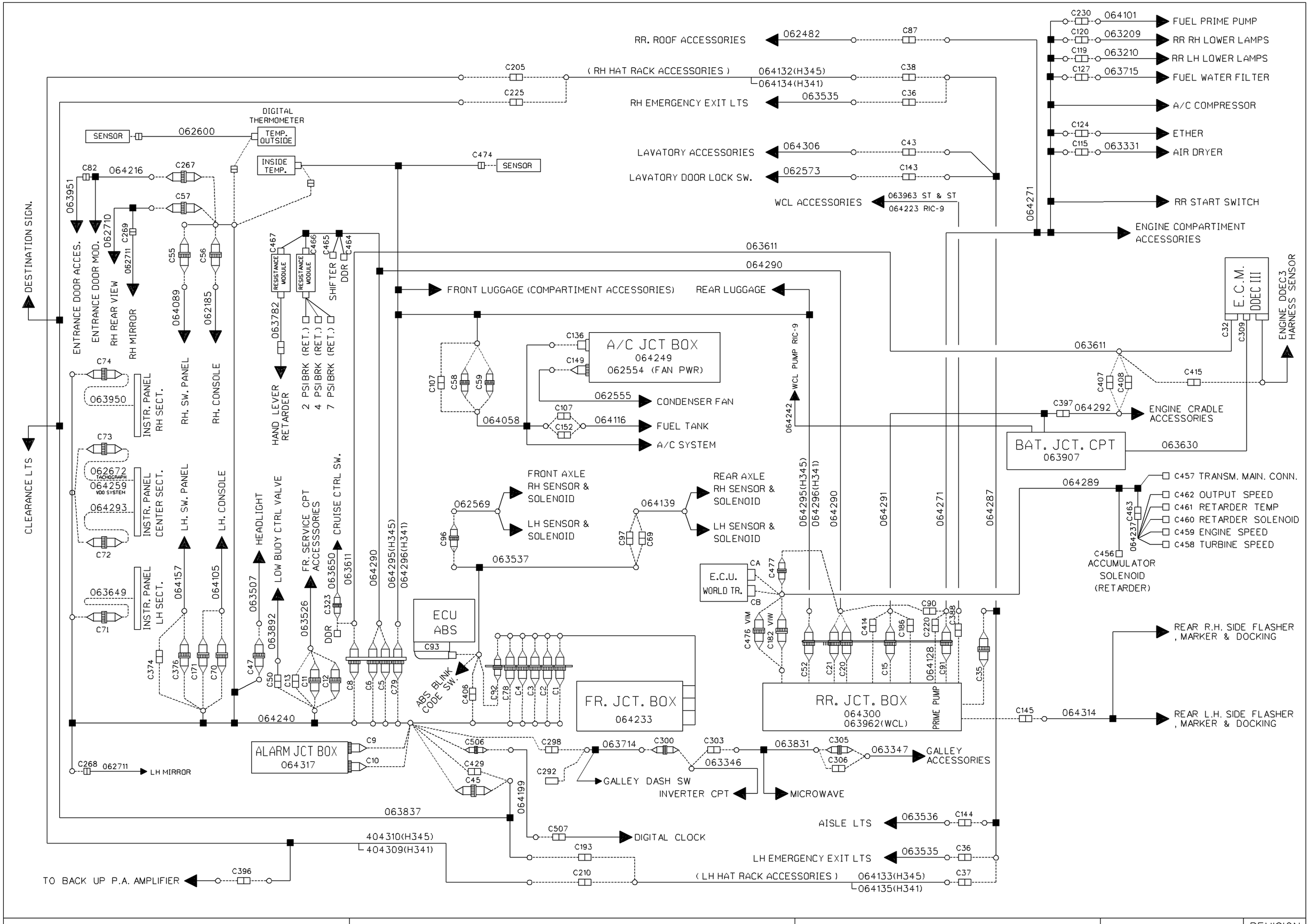

PREVOST CAR inc.	WIRING DIAGRAM	NO: D060869	P. C	REVISION 024

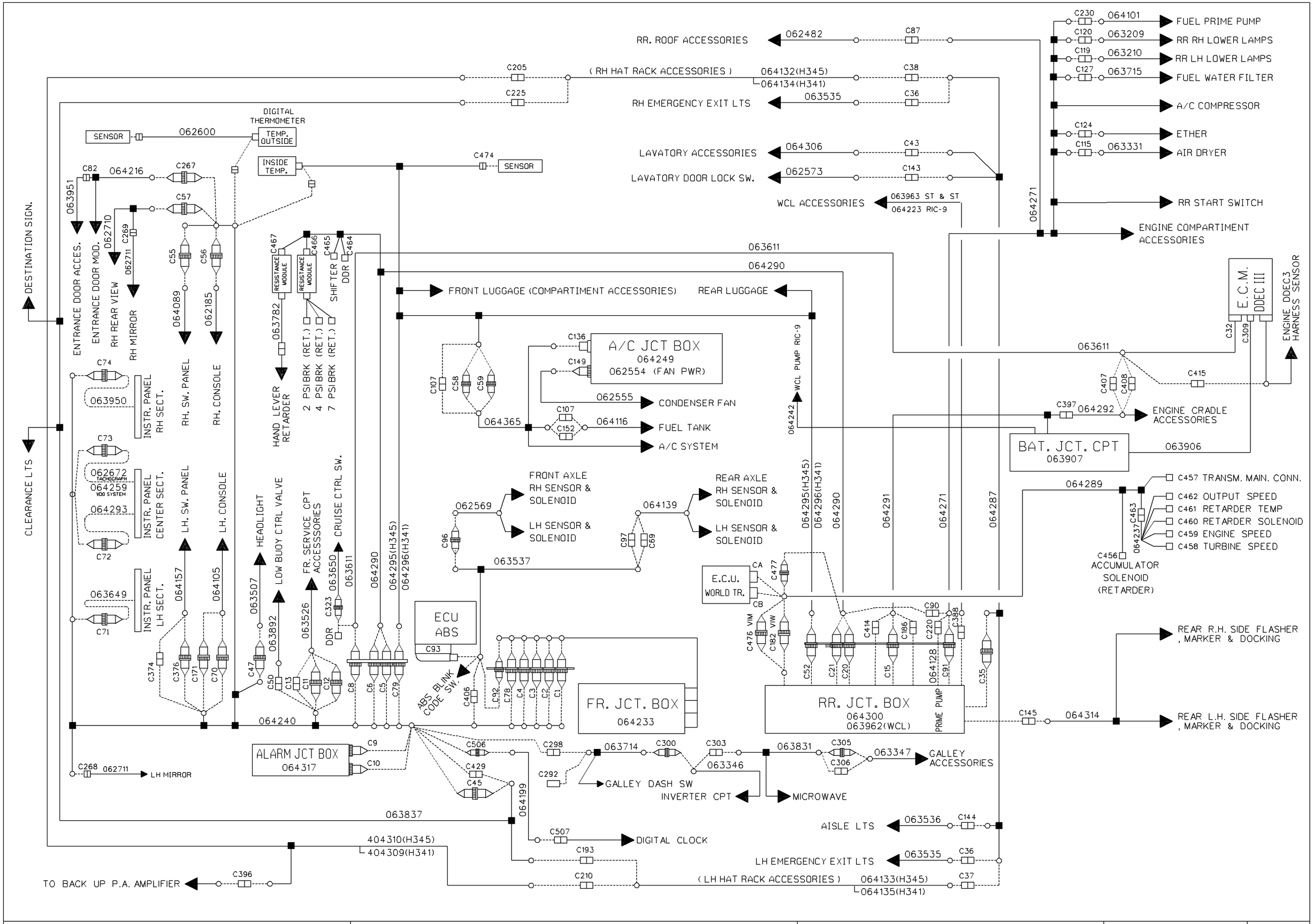

PREVOST CAR inc.	WIRING DIAGRAM	NO: D060869	P. C	REVISION 025

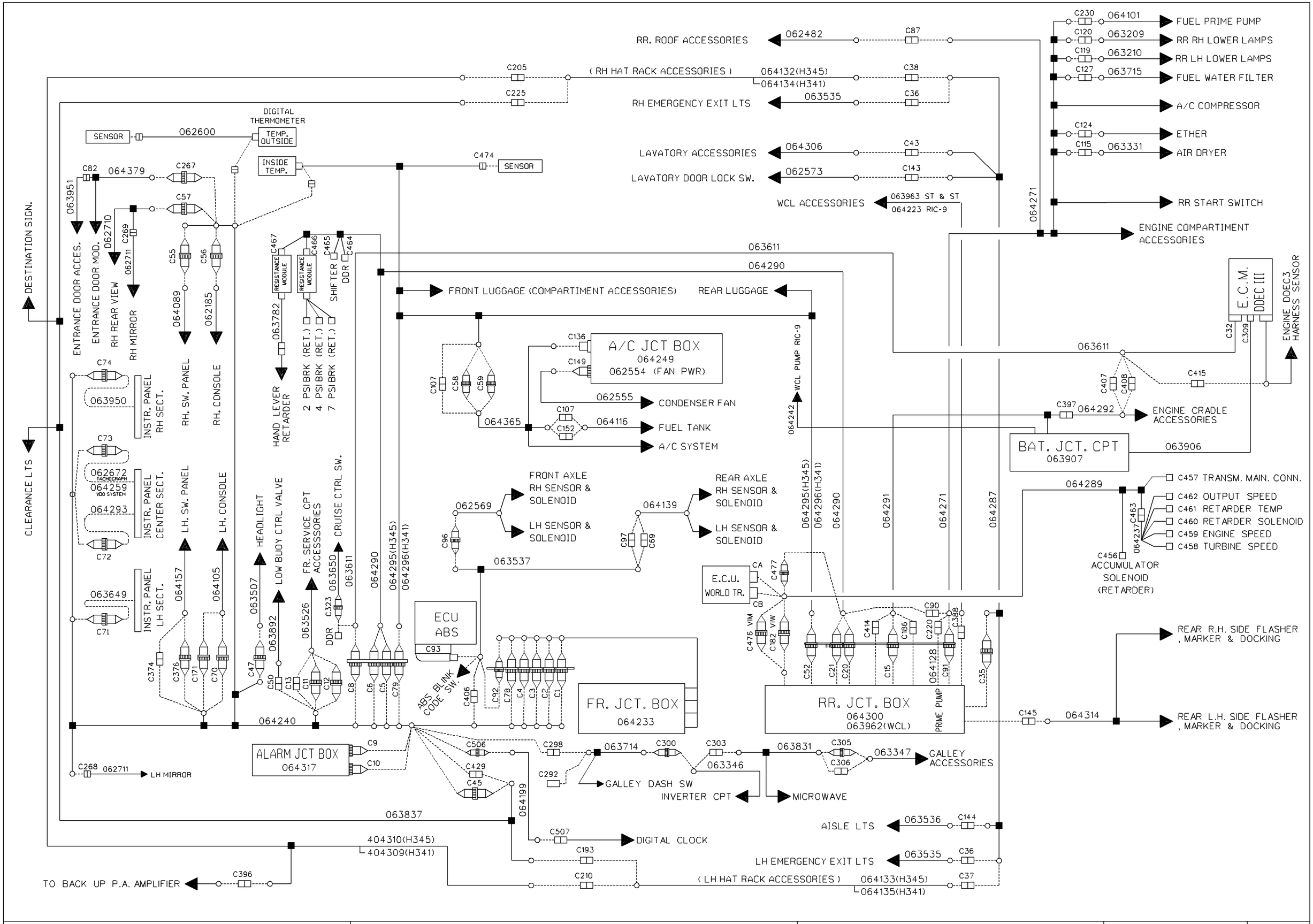

PREVOST CAR inc.	WIRING DIAGRAM	NO: D060869	P. C	REVISION 028

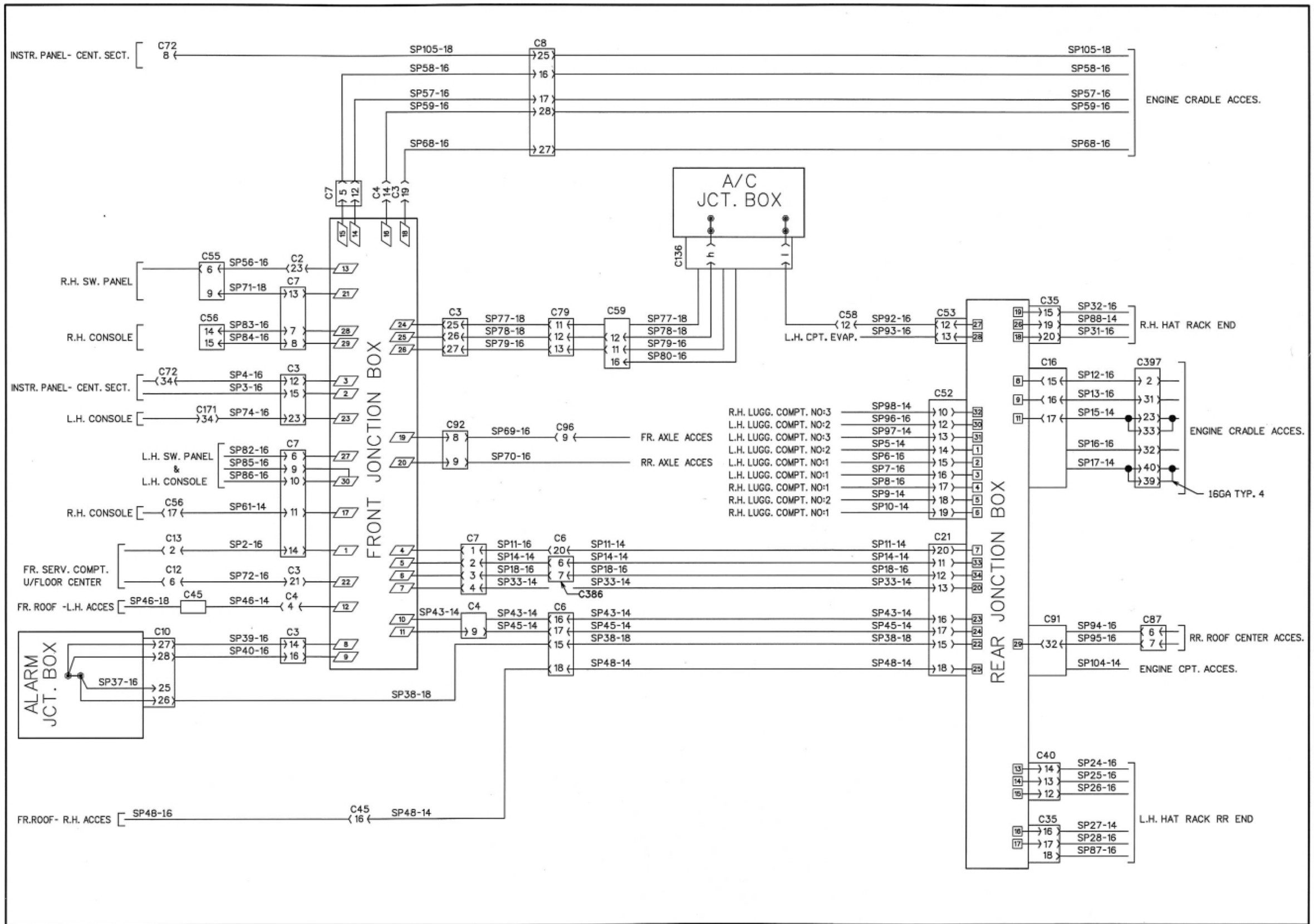

PREVOST CAR inc.	WIRING DIAGRAM	NO: D060869	P. D	REVISION 000

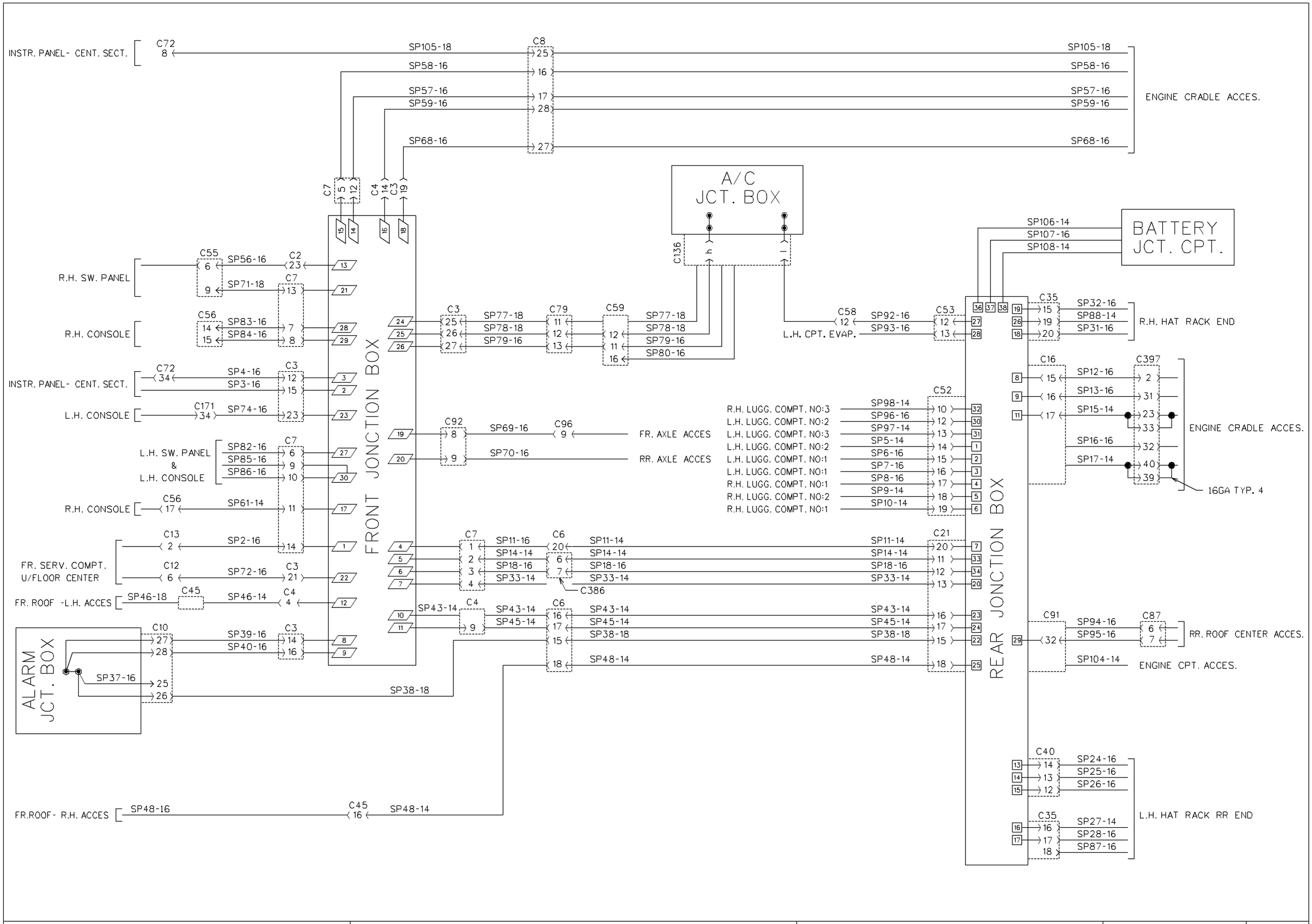

PREVOST CAR inc.	WIRING DIAGRAM	NO: D060869	P. D	REVISION 012

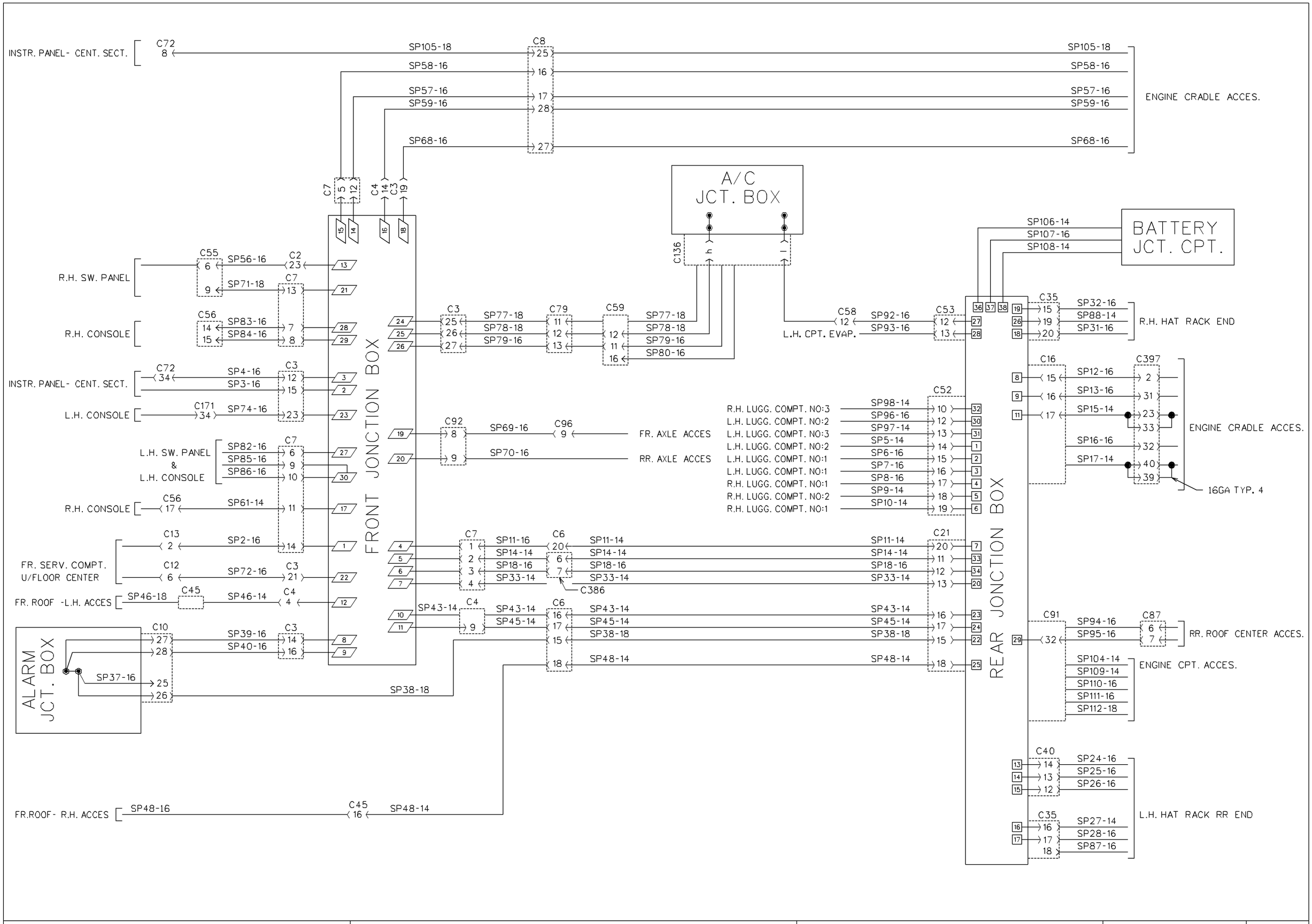

PREVOST CAR inc.	WIRING DIAGRAM	NO: D060869	P. D	REVISION 013

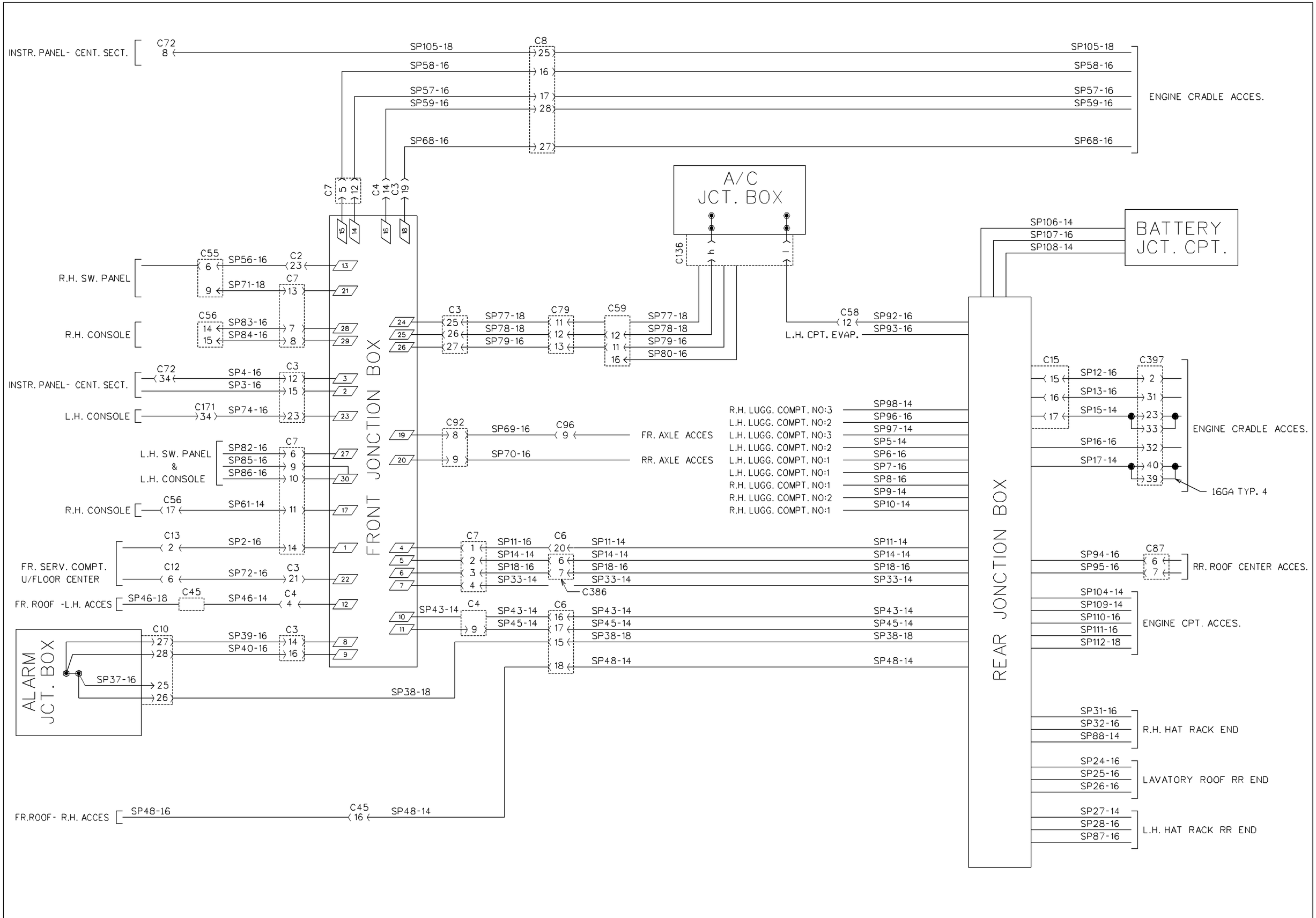

PREVOST CAR inc.	WIRING DIAGRAM	NO: D060869	P. D	REVISION 021

CIRCUIT NUMBER CODE		Page E : 1
No.	SYSTEM	No. SYSTEM
0	EC - INVERTER CPT GRD	0RH RS - RR END LAMPS RH GRD
0I	GALLEY GRD	0SS SOUNS SYSTEM BATT. GRD
0J	BC - BAT. CPT GRD	0SA SOUND SYSTEM BATT. GRD
0J	CONDENSER CPT GRD	0T FS - LUG. CPT ACCES. GRD
0J	A/C - A/C JCT BOX GRD	0W RR JCT BOX CPT GRD STUD
0J	GALLEY GRD	0W FS - RR JCT BOX CPT GRD
0J	A/C - A/C JCT BOX GRD	0W RS - RR JCT BOX CPT GRD
0J	GALLEY GRD	0W FS - UNDER DASH CENT GRD
0J	VIDEO GRD	0W RS - RR JCT BOX
0JA	A/C - A/C JCT BOX GRD	0WA FS - FR JCT BOX CPT GRD STUD
0JA	FRS - FR ROOF ACCES. GRD	0WC RS - RR JCT BOX GRD WCL
0JA	RS - LUG. CPT ACCES. GRD	0Y FS - FR CONS. CARD NOT USED
0JA	AJB - ALARM JCT BOX GRD	0Y FR JCT BOX CPT GRD STUD
0JA	FS - FR ROOF ACCES. GRD	0Y FR JCT BOX CPT GRD
0JAA	RS - VOLTAGE REGULATOR GRD	0YC FR JCT BOX GRD WCL
0JB	EC - ENGINE GRD	0Y FR JCT BOX CPT GRD
0JB	FRS - FR ROOF HEAT JKN GRD	0Y FR JCT BOX CPT GRD
0JB	FS - FR ROOF ACCES. GRD	0Y ABS FR JCT BOX CPT GRD STUD
0JB	RS - LUG. CPT ACCES. GRD	0Y 12V IGNITION DISTRIBUTION
0JB	A/C - A/C JCT BOX GRD	12A FR JCT BOX 12V IGNITION
0JB	FS - FR ROOF ACCES. GRD	12B FR JCT BOX 12V IGNITION
0JBE	RJB - BATT.EQUAL.,BAT GRD	12B FR JCT BOX 12V IGNITION
0JC	EC - STARTER MOTOR GRD	12F FR JCT BOX 12V IGNITION
0JC	BAT.EQUAL.SYSTEM GRD	12P INVERTER CPT 12V DISC SW
0JC	FS - SERV. CPT ACCES. GRD	2C A/C & HEAT SYSTEM-L.O PRESS SW
0JC	RS - ENGINE ACCES. GRD	12R BAT CPT 12V DISC SW - TO RJB
0JC	RJB - SPEED SW, BATT.GRD	12S FJB TO BAT. 12V HOT WIRE
0JC	FS - FR ROOF ACCES. GRD	12T FR JCT BOX 12V IGNITION
0JCS	24V DISC.SW.,RL/ GRD SIGNAL	12VD 12V HOT WIRE DISTRIBUTION
0JD	FS - SERV. CPT ACCES. GRD	12VF BAT CPT 12V F.B & JC
0JD	RS - HAT RACK ACCES.,LH GRD	12VG INVERTER CPT 12V DISC SW
0JDF	RS - RR SIDE FLASH & MARK GRD	12VI 12V IGNITION DISTRIBUTION
0JE	FS - FR LAMPS GRD	12VR BAT CPT 12V DISC.RL/ TO RJB
0JE	RS - HAT RACK ACCES.LH GRD	12W UPPER WINDSHIELD DEFROSTER
0JE	FRS - HAT RACK ACCES.,RH GRD	12X FR JCT BOX 12V IGNITION
0JEE	FRS - HEAD & GROUND,LTS GRD	12Y FR JCT BOX 12V IGNITION
0JF	RS - HAT RACK ACCES.,RH GRD	12Y FR JCT BOX 12V IGNITION
0JG	RS - HAT RACK ACCES.,RH GRD	12Z FR JCT BOX 12V IGNITION
0JG	FS - INSTR.PANEL LH GRD	13A ALARM & SIGNAL-LO AIR PRES.
0JH	FS - INSTR.PANEL CENT GRD	13B ALARM & SIGNAL-CENT SEC.
0JH	RS - LAVATORY ACCES.,GRD	13C LAVATORY-FLUSHING PUMP
0JI	FS - LAVATORY ACCES.,GRD	13D ALARM & SIGNAL-FUEL PUMP
0JJ	FS - SW CONSOLE LH GRD	13E EXTERIOR,LTS-HIGH LEVEL
0JJ	RS - RR ROOF ACCES. GRD	13F WIPER & WASHER UPPER WINDSHIELD
0JK	RS - RR ROOF ACCES. GRD	13G SPEEDO - SIGNAL
0JL	RS - ENGINE CPT ACCES.,GRD	13H SPEEDO - TRANSMITTER
0JL	FS - UNDER DASH RH GRD	13J INTERIOR,LTS-FR SERVICE CPT
0JLA	ENTRANCE DOOR (SEDAN) GRD	13K INTERIOR,LTS-FR FLASHER UNIT
0JM	FS - UNDER DASH RH GRD	13L INTERIOR,LTS-LUGGAGE CPT
0JM	RS - ENGINE CPT ACCES.,GRD	13M INTERIOR,LTS-LUGGAGE CPT
0JM	FS - UNDER DASH RH GRD	13N INTERIOR,LTS-LUGGAGE CPT
0JMR	24V DISC.SW.,RL/ GRD SIGNAL	13P INTERIOR,LTS-LUGGAGE CPT
0JNS	FS - UNDER DASH RH GRD	13R INTERIOR,LTS-LUGGAGE CPT
0JN	RS - ENGINE CPT ACCES.,GRD	13M INTERIOR,LTS-LUGGAGE CPT
0JP	RS - ENGINE CPT ACCES.,GRD	13T INTERIOR,LTS-LUGGAGE CPT
0JP	RS - ENGINE CPT ACCES.,GRD	13U INTERIOR,LTS-LUGGAGE CPT
0JR	FS - UNDER DASH LH GRD	13V INTERIOR,LTS-LUGGAGE CPT
0JR	RS - ENGINE CPT ACCES.,GRD	13W INTERIOR,LTS-LUGGAGE CPT
		13X INTERIOR,LTS-LUGGAGE CPT
		13Y INTERIOR,LTS-LUGGAGE CPT
		13Z DOOR AJAR
		1E FR DESTINATION SIGN
		1H FR DESTINATION SIGN
		1J FR DESTINATION SIGN
		1K SOUNS SYSTEM BATT. GRD
		1L BAT CPT 12V BATTERY
		1Z FR JCT BOX 12V DISC SW
		12A 12V BAT CPT JCT BLOCK
		12A FR JCT BOX 12V DISC SW
		12B FR JCT BOX 12V DISC SW
		12B FR JCT BOX 12V DISC SW
		12B 12V BAT CPT JCT BLOCK
		12BE BAT.EQUAL.LIER MONITOR
		12C FR JCT BOX 12V DISC SW
		12D BAT CPT 12V BATTERY
		12E FR JCT BOX 12V DISC SW
		12F FR JCT BOX 12V DISC SW
		12G FR JCT BOX 12V DISC SW
		12H FR JCT BOX 12V DISC SW
		12J FR JCT BOX 12V DISC SW
		12K FR JCT BOX 12V DISC SW
		12L FR JCT BOX 12V DISC SW
		12M FR JCT BOX 12V DISC SW
		12N FR JCT BOX 12V DISC SW
		12P FR JCT BOX 12V DISC SW
		12Q FR JCT BOX 12V DISC SW
		12R FR JCT BOX 12V DISC SW
		12S FR JCT BOX 12V DISC SW
		12T FR JCT BOX 12V DISC SW
		12U FR JCT BOX 12V DISC SW
		12V FR JCT BOX 12V DISC SW
		12W FR JCT BOX 12V DISC SW
		12X FR JCT BOX 12V DISC SW
		12Y FR JCT BOX 12V DISC SW
		12Z FR JCT BOX 12V DISC SW
		13 LAVATORY-FLUSHING PUMP
		13A ALARM & SIGNAL-LO AIR PRES.
		13B ALARM & SIGNAL-CENT SEC.
		13C LAVATORY-FLUSHING PUMP
		13D ALARM & SIGNAL-FUEL PUMP
		13E EXTERIOR,LTS-HIGH LEVEL
		13F WIPER & WASHER UPPER WINDSHIELD
		13G SPEEDO - SIGNAL
		13H SPEEDO - TRANSMITTER
		13J INTERIOR,LTS-FR SERVICE CPT
		13K INTERIOR,LTS-FR FLASHER UNIT
		13L INTERIOR,LTS-LUGGAGE CPT
		13M INTERIOR,LTS-LUGGAGE CPT
		13N INTERIOR,LTS-LUGGAGE CPT
		13P INTERIOR,LTS-LUGGAGE CPT
		13R INTERIOR,LTS-LUGGAGE CPT
		13M INTERIOR,LTS-LUGGAGE CPT
		13T INTERIOR,LTS-LUGGAGE CPT
		13U INTERIOR,LTS-LUGGAGE CPT
		13V INTERIOR,LTS-LUGGAGE CPT
		13W INTERIOR,LTS-LUGGAGE CPT
		13X INTERIOR,LTS-LUGGAGE CPT
		13Y INTERIOR,LTS-LUGGAGE CPT
		13Z DOOR AJAR
		21B FR DESTINATION SIGN
		21H FR DESTINATION SIGN
		21K FR DESTINATION SIGN
		21L FR DESTINATION SIGN
		21P EXTERIOR,LTS-CORNERING LH
		23 EXTERIOR,LTS-DIRECTIONAL RH
		23 EXTERIOR,LTS-DIRECTIONAL RH
		23A EXTERIOR,LTS-DIRECTIONAL RH
		23B EXTERIOR,LTS-DIRECTIONAL RH
		23C EXTERIOR,LTS-CORNERING RH
		23D EXTERIOR,LTS-CORNERING RH
		23P EXTERIOR,LTS-CORNERING RH
		24 BAT CPT 24V BATTERY
		24A FR JCT BOX 24V DISC SW
		24A BOOSTER BLOCK 24V DISC SW
		24A FR JCT BOX 24V DISC SW
		24A FR JCT BOX 24V DISC SW
		24A FR JCT BOX 24V DISC SW
		24B FR JCT BOX 24V DISC SW
		24B 24V STARTER RL-1 FEEDING
		24B RJB OFF-BAT.24V DISC SW
		24C FR JCT BOX 24V DISC SW
		24D BAT CPT 24V HOT WIRE
		24E BAT CPT 24V HOT WIRE
		24F A/C JCT BOX 24V HOT WIRE
		24G BAT CPT 24V DISC SW
		24H FR JCT BOX 24V DISC SW
		24J FR JCT BOX 24V DISC SW
		24K FR JCT BOX 24V DISC SW
		24L FR JCT BOX 24V DISC SW
		24M FR JCT BOX 24V DISC SW
		24N FR JCT BOX 24V DISC SW
		24P FR JCT BOX 24V DISC SW
		24Q FR JCT BOX 24V DISC SW
		24R FR JCT BOX 24V DISC SW
		24S FR JCT BOX 24V DISC SW
		24T FR JCT BOX 24V DISC SW
		24U FR JCT BOX 24V DISC SW
		24V FR JCT BOX 24V DISC SW
		24W FR JCT BOX 24V DISC SW
		24X FR JCT BOX 24V DISC SW
		24Y FR JCT BOX 24V DISC SW
		24Z FR JCT BOX 24V DISC SW
		24X 24V HOT WIRE DISTRIBUTION
		24Y BAT CPT 24V SW TO FJB & JC
		24Z INVERTER CPT 24V DISC SW
		24W BATTERY EQUALIZER 24V
		24X BAT CPT 24V DISC SW TO RJB
		24Y BAT CPT 24V DISC SW NCL1
		24Z BAT.L.CPT TO H/DL PUMP WCL1

PREVOST CAR inc. | WIRING DIAGRAM | NO: D060869 | P. E / 1/4 | REVISION 020

CIRCUIT NUMBER CODE		Page E : 2
No.	SYSTEM	No. SYSTEM
24AL	24V BATTERY-HYDUPUMP (WCL)	46A EXTERIOR,LTS-MARKER
24A	FR JCT BOX 24V DISC SW	46B EXTERIOR,LTS-MARKER
24A2	FR JCT BOX 24V DISC SW	46C EXTERIOR,LTS-MARKER
24Y	FR JCT BOX 24V DISC SW	46E EXTERIOR,LTS-MARKER
24Y2	FR JCT BOX 24V DISC SW	47 A/C & HEAT SYSTEM-DRIVER'S HTR
25	12VAC ON RL-1 ON SIGNAL	48 EXTERIOR DOOR (SEDAN)
25A	12V BAT CPT 12V DISC SW	49 ALARM & SIGNAL-LO T
25B	EXTERIOR,LTS-DAYTIME RUN LTS	50 AIR DRYER
26	DRIVER'S WINDOW LIFTER	52 ALARM & SIGNAL-ELEC. HORN
26	CIGAR LIGHTER	52A ALARM & SIGNAL-ELEC.,HORN
26B	DRIVER'S WINDOW LIFTER	56 LOW FUEL LT
26C	DRIVER'S WINDOW LIFTER	56C LOW FUEL LT
27	LAVATORY-EMERGENCY SIGNALLIGHT	56P FUEL PRIME PUMP
27A	A/C & HEAT SYSTEM-DRIVER'S HTR	56R FUEL PRIME PUMP
27B	A/C & HEAT SYSTEM-DRIVER'S HTR	57 A/C & HEAT SYSTEM-HI PRESSURE
27C	A/C & HEAT SYSTEM-DRIVER'S HTR	57A ALARM & SIGNAL-WATER TEMP
27D	A/C & HEAT SYSTEM-COMPRESSOR	53J WIPER & WASHER SYSTEM
27E	A/C & HEAT SYSTEM-COMPRESSOR	55 EXTERIOR,LTS-HEBEAM
27F	A/C & HEAT SYSTEM-COMPRESSOR	57 EXTERIOR,LTS-HEBEAM
30	GALLEY	57A EXTERIOR,LTS-HEBEAM
31A	A/C & HEAT SYSTEM-UNLOADER	57A A/C & HEAT SYSTEM-WATER PUMP
31B	A/C & HEAT SYSTEM-UNLOADER	57B A/C & HEAT SYSTEM-WATER PUMP
31C	WIPER & WASHER SYSTEM	57C PRE-HEAT WATER-HEATER
31D	WIPER & WASHER SYSTEM	57E EXTERIOR,LTS-HEAD LTS
31E	WIPER & WASHER SYSTEM	58 EXTERIOR,LTS-LO BEAM
31F	WIPER & WASHER SYSTEM	58A EXTERIOR,LTS-LO BEAM
32	EXTERIOR,LTS-BACK-UP	58E EXTERIOR,LTS-LO BEAM
32A	BACK-UP ALARM-SIGNAL	58F EXTERIOR,LTS-LO BEAM
32D	BACK-UP PWR & SIGNAL	61 EXTERIOR,LTS-24V FEED SW
32D	BACK-UP ALARM	61A EXTERIOR,LTS-HEAD SIGNAL
32F	BACK-UP MONITOR	62 LAVATORY-DOCKING LT
35	ENTRANCE DOOR (SEDAN)	62A LAVATORY-FLOOR LT
35B	ENTRANCE DOOR (SEDAN)	62B LAVATORY-FLOOR LT
35BB	ENTRANCE DOOR (SEDAN)	62E LAVATORY-OCCUP & FLUOR.LT
35C	DOOR AJAR-SIGNAL	63 EXTERIOR,LTS-CLEARANCE
35D	DOOR AJAR-SIGNAL	63A EXTERIOR,LTS-CLEARANCE
36A	JACOB BRAKE SYSTEM	63B EXTERIOR,LTS-CLEARANCE
38	INTERIOR,LTS-24V FLUORESCENT	63C EXTERIOR,LTS-HARKER SIGNAL
38A	INTERIOR,LTS-24V FLUORESCENT	63D EXTERIOR,LTS-MARKER & TAIL
38C	INTERIOR,LTS-24V FLUORESCENT	63E EXTERIOR,LTS-MARKER
38D	INTERIOR,LTS-24V FLUORESCENT	63F EXTERIOR,LTS-MARKER BLOWER
38E	INTERIOR,LTS-24V FLUORESCENT	63G A/C & HEAT SYSTEM
39	INTERIOR,LTS-DRIVING LIGHT	63H A/C & HEAT SYSTEM
41	A/C & HEAT SYSTEM-COND FAN HOT	67A A/C & HEAT SYSTEM
41A	A/C & HEAT SYSTEM-COND FAN HOT	67B A/C & HEAT SYSTEM & HEAT WINDS.
41B	A/C & HEAT SYSTEM-COND FAN HOT	67C A/C & HEAT SYSTEM-COND FAN CTR
42A	A/C & HEAT SYSTEM-COND FAN HOT	67L A/C & HEAT SYSTEM-EVAP FAN HOT
42B	A/C & HEAT SYSTEM-COND FAN HOT	67M A/C & HEAT SYSTEM-EVAP FAN HOT
44	EXTERIOR,LTS-FOG	67N A/C & HEAT SYSTEM-COND FAN HOT
44A	EXTERIOR,LTS-FOG	67P A/C & HEAT SYSTEM-COND FAN HOT
45	EXTERIOR,LTS-FOG & HAZARD	67R A/C & HEAT SYSTEM-COND FAN CTR
45B	A/C & HEAT SYSTEM-HEAT 3 SIGN	70 A/C & HEAT SYSTEM-EVAP FAN HOT
45C	A/C & HEAT SYSTEM-WATER VALVE	70J A/C & HEAT SYSTEM-COND FAN HOT
45E	A/C & HEAT SYSTEM-HEAT 1 SIGN	71 EXTERIOR,LTS-DOCKING
45G	A/C & HEAT SYSTEM-DRIVER'S HTR	71A EXTERIOR,LTS-DOCKING
45H	A/C & HEAT SYSTEM-DRIVER'S HTR	71B EXTERIOR,LTS-DOCKING
45K	A/C & HEAT SYSTEM-DRIVER'S HTR	71F EXTERIOR,LTS-DOCKING
46	EXTERIOR,LTS-MARKER	71G EXTERIOR,LTS-DOCKING
		71H EXTERIOR,LTS-DOCKING
		72 SUN VISOR-FEEDING
		72A SUN VISOR-RH
		72B SUN VISOR-RH
		72C SUN VISOR-LH
		72D SUN VISOR-LH
		73 LAVATORY-FEEDING
		74 INTERIOR,LTS-READING RH
		74A INTERIOR,LTS-READING RH
		74D INTERIOR,LTS-READING SIGNAL
		74E INTERIOR,LTS-READING LH
		74F INTERIOR,LTS-READING LH
		76 FUEL TANK GAUGE
		76B LOW FUEL L & ETHER COLD START
		76C LOW FUEL LT
		76P FUEL PRIME PUMP
		76R FUEL PRIME PUMP
		77 A/C & HEAT SYSTEM-HI PRESSURE
		77A A/C & HEAT SYSTEM-DRIVER'S HTR
		77B A/C & HEAT SYSTEM-COMPRESSOR
		77C A/C & HEAT SYSTEM-COMPRESSOR
		77H A/C & HEAT SYSTEM-COMPRESSOR
		81 EXTERIOR,LTS-STOP SIGNAL
		82 EXTERIOR,LTS-STOP SIGNAL
		82A EXTERIOR,LTS-STOP SIGNAL
		82B EXTERIOR,LTS-STOP LTS
		82K EXTERIOR,LTS-STOP PARK BRK
		83 EXTERIOR,LTS-LH STOP
		82R EXTERIOR,LTS-LH STOP
		84 ENGINE CTR-KEY SW ACCES SIGN
		84 ENGINE CTR-KEY SW START SIGN
		85 ENGINE CTR-SW IGNITION SIGN
		85 IGNITION SIGNAL
		85A 24V SGN DASH INSTRUMENTATION
		85F ENGINE CTR-24V IGNITION
		85G PARKING BRAKE SWITCH
		85P LO AIR SIGNALERT
		85P ENGINE CTR-ENGINE CTRL SW JKN
		86 24V IGN-AIR DRYER
		87 24V START SIGN
		87A LT. SKID-WARNING LT
		88 ENGINE CTR-STARTER SOL SIGN
		86A ENGINE CTR-STARTER SOL. SIGN
		88 ENGINE CTR-START SIGNAL
		89 ENGINE CTR-HR START SIGNAL
		90 A/C & HEAT SYSTEM-COND FAN HOT
		90 A/C & HEAT SYSTEM-FRESH AIR
		90B ENGINE CTR-INSTRUMENT ON-FEED
		90C A/C & HEAT SYSTEM-EVAP FAN HOT
		90D A/C & HEAT SYSTEM-EVAP FAN HOT
		90F CHARG SYST-VOLTAGE REGUL.,"B"
		90G A/C & HEAT SYSTEM-COND FAN HOT
		90H A/C & HEAT SYSTEM-EVAP FAN HOT
		90J A/C & HEAT SYSTEM-COND FAN HOT
		90K A/C & HEAT SYSTEM-COND FAN HOT
		90L DOOC-FAST IDLE SIGNAL
		90M PARK. BRAKE SW., SIGN. WCL1
		92 BATTERY EQUALIZER-CHECK BALANCE
		93 BATTERY EQUALIZER-CHECK LO-HI
		95 ENGINE BRAKE & RETARDER SYSTEM
		96 TACHOMETER
		102 SUN VISOR-LH
		102A INTERIOR,LTS-GENERAL
		102B INTERIOR,LTS-GENERAL
		101 24V STARTER SOL FEEDING
		101 WORLD TRANSM-LO SIGNAL SOL.,LO
		102 24V STARTER SOLENOID
		102 WORLD TRANSM-SOL.-ORD.1
		102 WORLD TRANSM-SOL.-C3
		103 LOW BOOT
		103 WORLD TRANSM-SOL.-FORWARD
		105 WORLD TRANSM-RETARDER & SUMP
105W	WORLD TRANSM-RETARDER & SUMP	
106	WORLD TRANSM-OIL LEVEL HI	
107	TACHOMETER-VOL.LEVEL HI	
107	WORLD TRANSM-LOCKUP SOL.	
108	WORLD TRANSM-REMOTE PWR WAKE UP	
109	WORLD TRANSM-SOL.-C4	
110	WORLD TRANSM-WATER TEMP	
110	WORLD TRANSM-LOCKUP SOL.,LO	
111	WORLD TRANSM-SOL.-C5	
112	WORLD TRANSM-SPARE OUTPUT (+)	
113	ALARM & SIGNAL-OIL PRESS	
113	WORLD TRANSM-REVERSE WARNING	
114	WORLD TRANSM-SPARE OUTPUT (+)	
114	INTERIOR,LTS-DASH-LT REGUL.	
114A	INTERIOR,LTS-DASH-L	
114B	INTERIOR,LTS-DASH-LT REGUL.	
114D	INTERIOR,LTS-DASH-LT REGUL.	
115	WORLD TRANSM-SOL.,OUT	
115	ALARM & SIGNAL-TAC PRESS	
115	WORLD TRANSM-SOL.-C6	
115	WORLD TRANSM-SOLENOID SHIFT SIGNAL	
115C	DOO-ELL-COOLANT LEVEL	
115V	WORLD TRANSM-SHIFT SOL.	
116	WORLD TRANSM-LO SIGNAL SOL.,HI	
116B	A/C & HEAT SYSTEM-DRIVER'S HTR	
117	WORLD TRANSM-SPARE INPUT (+)	
117	ALARM & SIGNAL-HIGH OIL TEMP	
118	WORLD TRANSM-SPARE INPUT (+)	
118	WORLD TRANSM-SPARE INPUT (+)	
119	WORLD TRANSM-ENG.BRK INPUT (+)	
120	WORLD TRANSM-SOL.-C1	
121	WORLD TRANSM-SOL.,ORD	
122	WORLD TRANSM-SOL.-ORD.4	
123	A/C & HEAT SYSTEM-DRIVER'S HTR	
123	A/C & HEAT SYSTEM-FRESH AIR	
123A	A/C & HEAT SYSTEM-FRESH AIR	
123A	ALARM & SIGNAL-FINE DETECTOR	
123B	ALARM & SIGNAL-FINE DETECTOR	
123C	WORLD TRANSM-THROTTLE (HI)	
125	WORLD TRANSM-RETARDER INDICATOR	
125	LAVATORY-FAN	
125	WORLD TRANSM-C2	
125W	WORLD TRANSM-RETARDER INDICATOR	
126	WORLD TRANSM-LUBE PRESS SW.	
126A	KNEELING SYSTEM	
126B	KNEELING SYSTEM	
126C	KNEELING SYSTEM	

PREVOST CAR inc. | WIRING DIAGRAM | NO: D060869 | P. E 3/4 | REVISION 020

CIRCUIT NUMBER CODE		Page E : 3
No.	SYSTEM	No. SYSTEM
126D	KNEELING SYSTEM	13R ABS SYSTEM
126E	KNEELING SYSTEM	13T WORLD TRANSM-OUTPUT SPEED LO
126F	KNEELING SYSTEM	14B ABS SYSTEM
126G	KNEELING SYSTEM	14D ABS SYSTEM
126H	KNEELING SYSTEM	14I WORLD TRANSM-ENGINE SPEED HI
126K	KNEELING SYSTEM	14J ABS SYSTEM
126P	KNEELING SYSTEM	14Q WORLD TRANSM-SERIAL COM.A
126Q	KNEELING SYSTEM	14R ABS SYSTEM
126R	KNEELING SYSTEM	14S WORLD TRANSM-ECU BATTERY ORD
126T	KNEELING SYSTEM	14Sb ABS SYSTEM
126W	S-PIN ELC. SIGNAL (WCL)	14W WORLD TRANSM-BATTERY ORD
127	WORLD TRANSM-RETARDER FEED SOL.	14X WORLD TRANSM-BATTERY ORD
127A	PRE-HEAT WATER-HEATER	14Y WORLD TRANSM-ECU CHASSIS ORD
127A	PRE-HEAT WATER-HEATER	144 ABS SYSTEM
127B	PRE-HEAT WATER-HEATER	144 ABS SYSTEM
127B	PRE-HEAT WATER-HEATER	145 ABS SYSTEM
127E	PRE-HEAT WATER-HEATER	146 ABS SYSTEM
128	WORLD TRANSM-SOL.,C3	146 WORLD TRANSM-IGNITION SENSE
128	PRE-HEAT WATER-HEATER	146W WORLD TRANSM-12V IGNITION
128A	PRE-HEAT WATER-HEATER	146 WORLD TRANSM-12V IGNITION
129	WORLD TRANSM-OIL TEMP	147B FUEL WATER FILTER
129	WORLD TRANSM-C7	147 FUEL WATER FILTER
129	PRE-HEAT WATER-HEATER	147 ETHER COLD START
129	WORLD TRANSM-SOL.,C5	147C ETHER COLD START
130	WORLD TRANSM-SOL.,ORD.3	148 WORLD TRANSM-OUTPUT SPEED LO
131	WORLD TRANSM-SOL.,C4	148 ABS SYSTEM
132	WORLD TRANSM-ENGINE OUTPUT (+)	200 WORLD TRANSM-TURBINE SPEED HI
132W	WORLD TRANSM-ENG.BRK OUTPUT (+)	149 ABS SYSTEM
133	WORLD TRANSM-SOL.,ORD.2	150 WORLD TRANSM-SOL.,C1
133	GALLEY-HEAT CONTAINERS	150 WORLD TRANSM-ENGINE SPEED LO
133A	GALLEY-HEAT CONTAINERS	150 DOO-ELL-ECH BATTERY ORD
133B	GALLEY-HEAT CONTAINERS	150 DOO-ELL-ECH BATTERY ORD
133C	GALLEY-HEAT CONTAINERS	151 DOO-ELL-ECH BATTERY ORD
134	WORLD TRANSM-RET.,APPL.T. SOL.,HI	151 WORLD TRANSM-SERIAL COM.B
134	GALLEY-HEAT CONTAINERS	151 ABS SYSTEM
134	GALLEY-HEAT CONTAINERS	152 ABS SYSTEM
135	WORLD TRANSM-SOL.,C2	152 ABS SYSTEM
135	WORLD TRANSM-ANALOG ORD	152A ABS SYSTEM
135A	A/C & HEAT SYSTEM-AIR SENSOR	152 WORLD TRANSM-SPARE INPUT (+)
135Q	WORLD TRANSM-RETARDER TEMP	153 ABS SYSTEM
135Q	WORLD TRANSM-RETARDER TEMP	153 WORLD TRANSM-ABS RETARDER INPUT
135Q	WORLD TRANSM-RETARDER RES HOD	154 ABS SYSTEM
135Q	WORLD TRANSM-RETARDER TEMP	154 WORLD TRANSM-SPARE INPUT (+)
136	GALLEY-ICE DISPENSER	155 ABS SYSTEM
136	WORLD TRANSM-ECU POWER	156 WORLD TRANSM-THROTTLE POS.
136A	WORLD TRANSM-12V BATTERY	156 ABS SYSTEM
136H	WORLD TRANSM-12V BATTERY	156A ABS SYSTEM
136K	WORLD TRANSM-12V BATTERY	157 ABS SYSTEM
137	RR VIEW MIRROR (SPARTAN)	157 ABS SYSTEM
137A	RR VIEW MIRROR (SPARTAN)	157B ABS SYSTEM
137B	RR VIEW MIRROR (SPARTAN)	157B ABS SYSTEM
137C	RR VIEW MIRROR (SPARTAN)	158 WORLD TRANSM-DIMMER
137D	RR VIEW MIRROR (SPARTAN)	160 ALARM & SIGNAL-TAC PRESS SW
137E	RR VIEW MIRROR (SPARTAN)	160 WORLD TRANSM-SERIL INTERFACE (+)
137F	RR VIEW MIRROR (SPARTAN)	160A WORLD TRANSM-SIGNAL ORD
137G	RR VIEW MIRROR (SPARTAN)	160B WORLD TRANSM-SIGNAL ORD
137H	RR VIEW MIRROR (SPARTAN)	162 WORLD TRANSM-RESS. SW C3
138	WORLD TRANSM-RETARDER TEMP	163 WORLD TRANSM-RETARDER ENABLE
138A	ABS SYSTEM	164 WORLD TRANSM-RET.,ACTUATOR SIGN
139	ABS SYSTEM	165 WORLD TRANSM-SOL.LEVEL SIGNAL
139	WORLD TRANSM-OUTPUT SPEED HI	165 A/C & HEAT SYSTEM-TRANSMITTER
		165A A/C & HEAT SYSTEM-TRANSMITTER
		165B A/C & HEAT SYSTEM-TRANSMITTER
		165C A/C & HEAT SYSTEM-TRANSMITTER
		166B A/C & HEAT SYSTEM-EXHP.MOD.
		167 A/C & HEAT SYSTEM-TEMP.CTR
		167A A/C & HEAT SYSTEM-TEMP.CTR
		168 WORLD TRANSM-SERL INTERFACE (+)
		169W A/C & HEAT SYSTEM-HUMIDISTAT
		169A A/C & HEAT SYSTEM-HUMIDISTAT
		170 LUGGAGE DOOR LOCK
		170C LUGGAGE DOOR LOCK
		170D LUGGAGE DOOR LOCK
		170F LUGGAGE DOOR LOCK
		172 DIGITAL THERMOMETER
		172 DIGITAL THERMOMETER
		197 FUEL WATER FILTER
		197A FUEL WATER FILTER
		197B FUEL WATER FILTER
		200 WORLD TRANSM-SPARE
		202 WORLD TRANSM-SPARE
		203 WORLD TRANSM-SPARE
		204 WORLD TRANSM-SPARE
		205 WORLD TRANSM-SPARE
		204 WORLD TRANSM-SPARE
		214 WORLD TRANSM-BACK UP SIGNAL
		215 WORLD TRANSM-SPARE
		223W NEUTRAL SIGNAL ORD WCL1
		248 DOO-ELL-ECM 12V FEEDING
		249 DOO-ELL-ECM 12V FEEDING
		250 VIDEO SYSTEM & TV RECEIVER
		250Z DOO-ELL-SENSOR BATTERY
		251 DOO-ELL-BATTERY ORD
		252 DOO-ELL-BATTERY ORD
		253 ABS SYSTEM
		254 ABS SYSTEM
		254A GALLEY-FRIDGE
		255 GALLEY-COFFEEMAKER
		255A GALLEY-COFFEEMAKER
		257 WINDSHIELD HEATED
		257A WINDSHIELD HEATED
		257B WINDSHIELD HEATED
		257D WINDSHIELD HEATED
		257G WINDSHIELD HEATED SPARE
		258 WINDSHIELD HEATED
		258 WINDSHIELD HEATED
		258A WINDSHIELD HEATED
		259 WINDSHIELD HEATED
		259 WINDSHIELD HEATED
		261 FAN CLUTCH RADIATOR
		261 FAN CLUTCH RADIATOR SPD 1
		262 FAN CLUTCH RADIATOR SPD 2
		300 DOOR AJAR HADLSW. (WCL)
		300A POWER SYSTEM SW. (WCL)
		300B DOOR AJAR AL.ARM (WCL)
		302 POWER SYSTEM SW. (WCL)
		302A DOOR AJAR T.I.,T.L. (WCL)
		302B DOOR AJAR ALARM (WCL)
		302D DOOR AJAR HADLSW. (WCL)
		303 REMOTE WALL SW.(BATV WCL)
		304 REMOTE WALL SW.(P. WCL)
		305 PARK.BRAKE SOL.,VAL.VE WCL1
		305A PARK.BRAKE SAFETY SW.(WCL)
		417 DOO-ELL-SHIT SPEED GOVERNOR
		419 DOO-ELL-CHECK ENGINE LIGHT

CIRCUIT NUMBER CODE Page E : 1

No.	SYSTEM	No.	SYSTEM	No.	SYSTEM	No.	SYSTEM	No.	SYSTEM	No.	SYSTEM
0	IC - INVERTER CPT GRD	0RH	RS - RH END LAMPS RH GRD	1E	FR DESTINATION SIGN	22F	EXTERIOR LTS-CORNERING LH				
0	GALLEY GRD	0SS	SOUNS SYSTEM BATT GRD	1H	FR DESTINATION SIGN	23	EXTERIOR LTS-DIRECTIONAL RH				
0	BC - BAT, CPT GRD	0SA	SOUNS SYSTEM BATT GRD	1J	BAT CPT 12V BATTERY	23	EXTERIOR LTS-DIRECTIONAL RH				
0	CONDENSER CPT GRD	0T	FS - LUG, CPT ACCESS, GRD	1J	FR JCT 80V 12V DISC SW	23A	EXTERIOR LTS-DIRECTIONAL RH				
0	A/C - A/C JCT BOX GRD	0W	RS - FR JCT 80V CPT GRD STUD	1K	12V BAT CPT JCT BLOCK	23B	EXTERIOR LTS-DIRECTIONAL RH				
0	GALLEY GRD	0W	RS - FR JCT 80V CPT GRD STUD	1L	FR JCT 80V 12V DISC SW	23C	EXTERIOR LTS-CORNERING RH				
0	A/C - A/C JCT BOX GRD	0X	BATTERY - UNDER DASH CPT GRD	12A	FR JCT 80V 12V DISC SW	23D	EXTERIOR LTS-CORNERING RH				
0	GALLEY GRD	0W	RS - UNDER DASH CPT GRD	12B	FR JCT 80V 12V DISC SW	23F	EXTERIOR LTS-CORNERING RH				
0	VIDEO GRD	0W	RS - RR JCT BOX	12B	12V BAT CPT JCT BLOCK	24	BAT CPT 24V BATTERY				
0A	A/C - A/C JCT BOX GRD	0W	FS - FR JCT 80V CPT GRD STUD	12C	BAT EQUALIZER MONITOR	24A	BOOSTER BLOCK 24V DISC SW				
0A	FRS - FR ROOF ACCESS, GRD	0WC	RS - RR JCT 80V GRD WCL	12C	FR JCT 80V 12V DISC SW	24A	FR JCT 80V 24V DISC SW				
0A	RS - LUG, CPT ACCESS, GRD	0X	BATTERY - UNDER DASH CPT GRD	12D	FR JCT 80V 12V DISC SW	24B	FR JCT 80V 24V DISC SW				
0A	A2B - ALARM JCT BOX GRD	0Y	FR JCT 80V CPT GRD STUD	12E	FR JCT 80V 12V DISC SW	24C	FR JCT 80V 24V DISC SW				
0A	A/C - A/C JCT BOX GRD	0Y	RS - FR JCT 80V CPT GRD	12F	FR JCT 80V 12V DISC SW	24D	FR JCT 80V 24V DISC SW				
0AA	RS - VOLTAGE REGULATOR GRD	0YC	RS - RR JCT 80V GRD WCL	12G	FR JCT 80V 12V DISC SW	24E	FR JCT 80V 24V DISC SW				
0B	EC - ENGINE GRD	0Y	RR JCT BOX GRD	12H	FR JCT 80V 12V DISC SW	24F	24V STARTER-FIL 1 FEEDING				
0B	FRS - FR ROOF HEAT JKN GRD	0Y	BAT CPT 24V F.W.B JC	12J	BAT CPT 24V F.W.B JC	24BE	BAT CPT 24V BATTERY HOT WIRE				
0B	FS - FR ROOF ACCESS, GRD	0Y	ABS FR JCT BOX CPT GRD STUD	12J	RR JCT BOX 12V IGNITION	24C	FR JCT 80V 24V DISC SW				
0B	RS - LUG, CPT ACCESS, GRD	0Y	ABS FR JCT BOX CPT GRD STUD	12K	FR JCT 80V 12V DISC SW	24D	BAT CPT 24V DISC SW				
0B	A/C - A/C JCT BOX GRD	1	TACHO SYSTEM	12LA	FR JCT 80V 12V DISC SW HOT WIRE	24E	BAT CPT 24V DISC SW				
0B	A/C - A/C JCT BOX GRD	1B	RR JCT 80V 12V DISC SW	12LB	FR JCT 80V 12V DISC SW HOT WIRE	24F	BAT CPT 24V DISC SW				
0BE	RJB - BATT,EQUAL,-BAT GRD	1C	EC - STARTER MOTOR GRD	12M	RR JCT 80V 12V DISC SW	24GF	A/C JCT 24V HOT WIRE				
0C	EC - STARTER MOTOR GRD	1	TACHO SYSTEM	12NF	FR JCT 80V 12V IGNITION	24E	BAT CPT 24V DISC SW				
0C	BAT,EQUALIZER GRD	2B	A/C & HEAT SYSTEM-COOL 1 SIGN	12P	INVERTER CPT 12V DISC SW	24F	A/C & HEAT SYSTEM				
0C	FS - SERV, CPT ACCESS, GRD	2C	A/C & HEAT SYSTEM-LO PRESS SW	12PV	INVERTER CPT 12V DISC SW	24F	FR JCT 80V 24V DISC SW				
0C	RS - ENGINE ACCESS, GRD	2D	A/C & HEAT SYSTEM-HI PRESS TT L T	12S	12V DISC SW, 12V TO RJB	24F	FR JCT 80V 24V DISC SW				
0C	RJB - SPEED SW, BAT,L GRD	4	HOSTESS & PASSENGER CHIME	12SS	FJB TO BAT 12V HOT WIRE	24F	FR JCT 80V 24V DISC SW				
0CB	RJB - SPEED SW, BAT,L GRD	5	UPPER WINDSHIELD DEFROSTER	12V	12V BAT CPT 12V DISC SW	24F	FR JCT 80V 24V DISC SW				
0CS	24V DISC, SW, RL, GRD SIGNAL	5A	PASSENGER CHIME	12VH	12V HOT WIRE DISTRIBUTION	24F	FR JCT 80V 24V DISC SW				
0D	FS - SERV, CPT ACCESS, GRD	5C	HOSTESS CHIME	12VE	BAT CPT 12V F.B & JC	24F	FR JCT 80V 24V DISC SW				
0D	RS - HAT RACK ACCES,L,LH GRD	5J	UPPER WINDSHIELD & EMERG.EXIT	12VJ	INVERTER CPT 12V DISC SW	24F	FR JCT 80V 24V DISC SW				
0DF	RS - RR SIDE FLASH & MARK GRD	5	UPPER WINDSHIELD DEFROSTER	12VE	12V IGNITION DISTRIBUTION	24I	FR JCT 80V 24V DISC SW				
0E	FS - FR LAMPS GRD	5VR	BAT CPT 12V DISC SW	12VR	BAT CPT 12V DISC SW	24I	RR JCT 80V 24V DISC SW				
0E	RS - HAT RACK ACCES,L,LH GRD	5E	UPPER WINDSHIELD DEFROSTER	12W	12V BATTERY DISC (1)	24JA	FR JCT 80V 24V IGNITION				
0E	RS - HAT RACK ACCES,L,LH GRD	5F	UPPER WINDSHIELD DEFROSTER	12X	FR JCT 80V 12V DISC SW	24JB	FR JCT 80V 24V IGNITION				
0EE	FRS - HEAD & CORNERING LTS GRD	5J	FR JCT 80V 12V DISC SW	12Y	FR JCT 80V 12V DISC SW	24JB	FR JCT 80V 24V IGNITION				
0F	RS - HAT RACK ACCES,-RH GRD	7A	SPEED SW 5 MPH N.O	12Y2	FR JCT 80V 12V DISC SW	24JB	FR JCT 80V 24V IGNITION				
0G	RS - HAT RACK ACCES,-RH GRD	7B	ENTRANCE DOOR (SEDAN)	13	ALARM & SIGNAL-LO AIR PRSN.	24JD	FR JCT 80V 24V IGNITION				
0G	FS - INSTR. PANEL LH GRD	7C	ENTRANCE DOOR (SEDAN)	13A	ALARM & SIGNAL-LO AIR PRSN.	24JD	FR JCT 80V 24V DISC SW				
0H	FS - INSTR.PANEL CENT GRD	7D	ENTRANCE DOOR (SEDAN)	13B	ALARM & SIGNAL	24JE	FR JCT 80V 24V DISC SW				
0H	RS - LAVATORY ACCESS, GRD	7DA	ENTRANCE DOOR (SEDAN)	14	LAVATORY-FLUSHING PUMP	24JF	FR JCT 80V 24V DISC SW				
0J	FS - SW CONSOLE,L,H GRD	7E	ENTRANCE DOOR (SEDAN)	15	ENGINE CPT-STARTER SOL SIGN	24JG	FR JCT 80V 24V DISC SW				
0J	FS - SW CONSOLE,L,H GRD	7F	ACHOWN TERMINAL (SEDAN)	15A	ENGINE CPT-STARTER SOL	24K	FR JCT 80V 24V DISC SW				
0L	FS - RR ROOF ACCES, GRD	7G	INTERIOR LTS-ENGINE CPT	15A	WIPER & WASHER UPPER WINDSHIELD	24PV	INVERTER CPT 24V DISC SW				
0L	RS - RR ROOF ACCES, GRD	7H	SPEED - SIGN	16	SPEED - TRANSMITTER	24S	24V DISC SW, RL1 SIGNAL				
0L	RS - ENGINE CPT ACCES, GRD	7H	SPEED - TRANSMITTER	16S	SPEED - TRANSMITTER	24T	RR JCT 80V 24V DISC SW				
0L, 0L	FS - ENGINE CPT ACCES, GRD	7HR	SPEED - TTS-FIR SERVICE CPT	17	INTERIOR LTS-FLASHER UNIT	24W2	RR JCT 80V 24V DISC SW				
0LA	ENTRANCE DOOR (SEDAN) GRD	7J	INTERIOR LTS-FR LR SERVICE CPT	17	INTERIOR LTS-FLASHER UNIT	24W3	RR JCT 80V 24V DISC SW				
0M	FS - ENGINE CPT ACCES, GRD	7K	INTERIOR LTS-LUGGAGE CPT	17A	DIFFERENTIAL OIL TEMP	24W4	RR JCT 80V 24V DISC SW				
0M	RS - ENGINE CPT ACCES, GRD	7KA	INTERIOR LTS-LUGGAGE CPT	17B	DIFFERENTIAL OIL TEMP	24W5	RR JCT 80V 24V DISC SW				
0M	FS - UNDER DASH-RH GRD	7KB	INTERIOR LTS-LUGGAGE CPT	20	SPEED - NEGATIVE SIGN	24X	BATTERY-TO EQUALIZER 24V				
0MR	24V DISC, SW, RL-1 GRD SIGNAL	7KC	INTERIOR LTS-LUGGAGE CPT	20	SPEED - NEGATIVE SIGN	24XD	24V HOT WIRE DISTRIBUTION				
0MS	24V DISC, SW, RL-1 GRD SIGNAL	7KF	INTERIOR LTS-LUGGAGE CPT	21B	EXTERIOR LTS-HEADLAMP	24Y	BAT CPT 24V SW TO F.JB & JC				
0N	FS - UNDER DASH-RH GRD	7KG	INTERIOR LTS-LUGGAGE CPT	23A	EXTERIOR LTS-DIRECTIONAL LH	24W	INVERTER CPT 24V DISC SW				
0N	RS - ENGINE CPT ACCES, GRD	7L	INTERIOR LTS-LUGGAGE CPT	23B	EXTERIOR LTS-HAZARD	24W1	RR JCT 80V 24V IGNITION				
0N	RS - ENGINE CPT ACCES, GRD	7LA	INTERIOR LTS-LUGGAGE CPT	23C	EXTERIOR LTS-DIRECTIONAL LH	24W2	RR JCT 80V 24V DISC SW				
0P	FS - ENGINE CPT ACCES, GRD	7LB	INTERIOR LTS-LUGGAGE CPT	23D	EXTERIOR LTS-DIRECTIONAL LH	24WC	RR JCT 80V 24V DISC SW WCL				
0R	FS - UNDER DASH LH GRD	11A	FR DESTINATION SIGN	23K	EXTERIOR LTS-CORNERING	24WC	BATT, CPT TO HYD. PUMP (WCL)				
0R	RS - ENGINE CPT ACCES, GRD	11C	FR DESTINATION SIGN	23N	EXTERIOR LTS-CORNERING LH						
		11E	FR DESTINATION SIGN								

PREVOST Car inc. WIRING DIAGRAM NO: D060869 P. E / 1 4 REVISION 000

CIRCUIT NUMBER CODE Page E : 2

No.	SYSTEM	No.	SYSTEM	No.	SYSTEM	No.	SYSTEM	No.	SYSTEM	No.	SYSTEM
24WL	24V BATTERY-HYDUMP (WCL)	46B	EXTERIOR LTS-HARNER	7SL	EXTERIOR LTS-DOCKING	10D	INTERIOR LTS-GENERAL				
24X	FR JCT 80V 24V DISC SW	46B	EXTERIOR LTS-HARNER	7T	SUN VISOR-FEEDING	10DA	INTERIOR LTS-GENERAL				
24X2	FR JCT 80V 24V DISC SW	46C	EXTERIOR LTS-HARNER	7U	SUN VISOR-RH	10E	INTERIOR LTS-GENERAL				
24Y	FR JCT 80V 24V DISC SW	47	A/C & HEAT SYSTEM-DRIVER'S HTR	7UR	SUN VISOR-RH	10J	24V STARTER SOL FEEDING				
24Y2	FR JCT 80V 24V DISC SW	48	ENTRANCE DOOR (SEDAN)	7V	SUN VISOR-LH	10L	INTERIOR LTS-GENERAL SOL, LO				
25	12VAC ON RL-1 ON SIGNAL	48A	ENTRANCE DOOR (SEDAN)	7VR	SUN VISOR-LH	10Z	24V STARTER TO GENERATOR				
25A	12VAC ON RL-1 ON SIGNAL	48B	ENTRANCE DOOR (SEDAN)	7W	INTERIOR LTS-READING RH	10Z	INTERIOR LTS-GENERAL				
25B	EXTERIOR LTS-DAY TIME RUN LTS	48C	ENTRANCE DOOR (SEDAN)	7WA	INTERIOR LTS-READING RH	10Z1	WORLD TRANSH-SOL, CD 1				
26	DRIVER'S WINDOW LIFTER	48D	ENTRANCE DOOR (SEDAN)	7WB	INTERIOR LTS-READING RH	10Z2	LOW BUOY				
26	CIGAR LIGHTER	49	BAT, EQUALIZER MONITOR	7X	INTERIOR LTS-READING LH	10V	WORLD TRANSH-SOL, FORWARD				
26B	DRIVER'S WINDOW LIFTER	49A	ENTRANCE DOOR (SEDAN)	7Y	INTERIOR LTS-READING LH	10W	WORLD TRANSH-RETARDER & SUMP				
26C	DRIVER'S WINDOW LIFTER	50	AIR DRYER	7Z	INTERIOR LTS-READING LH	10X	WORLD TRANSH-DIVERTER & SUMP				
27	LAVATORY-EMERGENCY SIGNALST	50B	ALARM & SIGNAL-ELEC. HORN	7AA	FUEL TANK	10Y	WORLD TRANSH-SOL LEVEL HI				
27A	A/C & HEAT SYSTEM-HI PRESSURE	50C	ALARM & SIGNAL-ELEC. HORN	7BB	ALARM & SIGNAL-ETHER COLD START	10Z	WORLD TRANSH-SOL, LEVEL HI"				
27B	A/C & HEAT SYSTEM-DRIVER'S HTR	50D	ALARM & SIGNAL-ELEC. HORN	7CA	FUEL TANK	10AA	WORLD TRANSH-SOL, LEVEL HI"				
27BA	A/C & HEAT SYSTEM-DRIVER'S HTR	50E	ALARM & SIGNAL-ELEC. HORN	7GH	FUEL PRIME PUMP	10BB	WORLD TRANSH-REMOTE PWR WAKE UP				
27BC	A/C & HEAT SYSTEM-DRIVER'S HTR	50F	FUEL PRIME PUMP	7H	FUEL PRIME PUMP	10CB	WORLD TRANSH-SOL, CD				
28A	GALLEY	53B	WIPER & WASHER SYSTEM	7T	A/C & HEAT SYSTEM-HI PRESSURE	12	ALARM & SIGNAL-WATER TEMP				
29	A/C & HEAT SYSTEM-UNLOADER	53C	WIPER & WASHER SYSTEM	7U	A/C & HEAT SYSTEM-DRIVER'S HTR	12D	WORLD TRANSH-SOL, LO				
29B	A/C & HEAT SYSTEM-UNLOADER	53E	WIPER & WASHER SYSTEM	7TB	A/C & HEAT SYSTEM-COMPRESSOR	12E	WORLD TRANSH-SOL, CE				
29C	A/C & HEAT SYSTEM-UNLOADER	53F	WIPER & WASHER SYSTEM	7TC	A/C & HEAT SYSTEM-COMPRESSOR	12F	WORLD TRANSH-SOL, CE (INPUT ++)				
29D	WIPER & WASHER SYSTEM	53G	WIPER & WASHER SYSTEM	7TD	A/C & HEAT SYSTEM-COMPRESSOR	13	ALARM & SIGNAL-HI AIR PRSN.				
31D	WIPER & WASHER SYSTEM	53H	WIPER & WASHER SYSTEM	7TE	A/C & HEAT SYSTEM-COMPRESSOR	13	WORLD TRANSH-REVERSE WARNING				
31E	WIPER & WASHER SYSTEM	53J	WIPER & WASHER SYSTEM	7TF	EXTERIOR LTS-STOP SIGNAL	14	WORLD TRANSH-SOL, CD 3				
31F	WIPER & WASHER SYSTEM	57A	A/C & HEAT SYSTEM-WATER PUMP	7TG	EXTERIOR LTS-STOP SIGNAL	14A	WORLD TRANSH-SOL, CD 3				
31G	WIPER & WASHER SYSTEM	57B	A/C & HEAT SYSTEM-WATER PUMP	7U	A/C & HEAT SYSTEM-WATER PUMP	14B	EXTERIOR LTS-DASH LT REGUL.				
32	EXTERIOR LTS-BACK-UP	57C	A/C & HEAT SYSTEM-WATER PUMP	7U	A/C & HEAT SYSTEM-WATER PUMP	14BB	EXTERIOR LTS-DASH LT REGUL.				
32A	EXTERIOR LTS-BACK-UP	57D	A/C & HEAT SYSTEM-WATER PUMP	7UA	A/C & HEAT SYSTEM-WATER PUMP	14C	EXTERIOR LTS-DASH LT REGUL.				
32B	EXTERIOR LTS-BACK-UP	57E	A/C & HEAT SYSTEM-WATER PUMP	7UB	A/C & HEAT SYSTEM-WATER PUMP	14CC	EXTERIOR LTS-DASH LT REGUL.				
32D	BACK-UP ALARM	58A	EXTERIOR LTS-LO BEAM	7UC	A/C & HEAT SYSTEM-WATER PUMP	15	ALARM & SIGNAL-TAG PRESS				
32F	BACK-UP HORN	58B	EXTERIOR LTS-LO BEAM	7UD	A/C & HEAT SYSTEM-WATER PUMP	15	DDEC III-COOLANT LEVEL				
35	ENTRANCE DOOR (SEDAN)	58E	EXTERIOR LTS-LO BEAM	7UE	A/C & HEAT SYSTEM-WATER PUMP	15	WORLD TRANSH-DO NOT SHIFT SIGNAL				
35B	ENTRANCE DOOR (SEDAN)	59	24V IGNITION	7UF	A/C & HEAT SYSTEM-WATER PUMP	15	DDEC III-COOLANT LEVEL, SOL.				
35BB	ENTRANCE DOOR (SEDAN)	59B	24V IGN DASH INSTRUMENTATION	7UG	A/C & HEAT SYSTEM-WATER PUMP	15W	WORLD TRANSH-DO NOT SHIFT SIGNAL				
35C	ENTRANCE DOOR (SEDAN)	59C	24V IGN ANTI SKID	7UH	A/C & HEAT SYSTEM-WATER PUMP	16	DDEC III-OIL PRESSURE SOL.				
35D	JACOB BRAKE SYSTEM	59D	24V IGN ANTI SKID	7UJ	A/C & HEAT SYSTEM-WATER PUMP	16B	A/C & HEAT SYSTEM-DRIVER'S HTR				
35E	JACOB BRAKE SYSTEM	59E	24V IGN ANTI SKID	7UK	A/C & HEAT SYSTEM-WATER PUMP	16W	WORLD TRANSH-SOL, TEMP				
38	INTERIOR LTS-24V FLUORESCENT	59F	24V IGN ANTI SKID	7UL	A/C & HEAT SYSTEM-WATER PUMP	17A	ALARM & SIGNAL-TRANSH-OIL TEMP				
38A	INTERIOR LTS-24V FLUORESCENT	59G	24V IGN ANTI SKID	7UM	A/C & HEAT SYSTEM-WATER PUMP	17B	ALARM & SIGNAL-TRANSH-OIL TEMP				
38B	INTERIOR LTS-24V FLUORESCENT	59H	24V IGN ANTI SKID	7UN	A/C & HEAT SYSTEM-WATER PUMP	18	WORLD TRANSH-ENG BRK INPUT (+)				
38D	INTERIOR LTS-24V FLUORESCENT	59J	ANTI SKID WARNING LTS	7UP	A/C & HEAT SYSTEM-WATER PUMP	18	WORLD TRANSH-ENG BRK INPUT (+)				
38E	INTERIOR LTS-24V FLUORESCENT	59K	ENGINE CTR-STARTER SOL SIGN	7UR	A/C & HEAT SYSTEM-WATER PUMP	19	WORLD TRANSH-SOL, CD 2				
38F	INTERIOR LTS-24V FLUORESCENT	59L	ENGINE CTR-STARTER SOL SIGN	7UR	A/C & HEAT SYSTEM-WATER PUMP	19	WORLD TRANSH-SOL, CD 2				
41	A/C & HEAT SYSTEM-COND FAN HOT	59M	ENGINE CTR-HR START SIGNAL	7UT	A/C & HEAT SYSTEM-WATER PUMP	19A	A/C & HEAT SYSTEM-DRIVER'S HTR				
41A	A/C & HEAT SYSTEM-COND FAN HOT	59N	ENGINE CTR-HR START SIGNAL	7UU	A/C & HEAT SYSTEM-WATER PUMP	19B	A/C & HEAT SYSTEM-FRESH AIR				
41B	A/C & HEAT SYSTEM-COND FAN HOT	59P	ENGINE CTR-HR START SIGNAL	7UV	A/C & HEAT SYSTEM-WATER PUMP	19C	A/C & HEAT SYSTEM-FRESH AIR				
41C	A/C & HEAT SYSTEM-COND FAN HOT	59R	ENGINE CTR-HR KEY SW FEED	7WB	ENGINE CTR-HEAT KEY SW FEED	19D	WORLD TRANSH-NEUTRAL START				
42	EXTERIOR LTS-FOG	59S	ENGINE CTR-HR KEY SW FEED	7WC	ENGINE CTR-HEAT KEY SW FEED	19E	A/C & HEAT SYSTEM-EVAP FAN HOT				
42A	EXTERIOR LTS-FOG	59T	ENGINE CTR-HR KEY SW FEED	7WD	ENGINE CTR-HEAT KEY SW FEED	19F	ALARM & SIGNAL-F.ONE DETECTOR				
42B	EXTERIOR LTS-FOG	59U	ENGINE CTR-HR KEY SW FEED	7WE	CHARG SYST-VOLTAGE REGUL.-SP	19G	A/C & HEAT SYSTEM-EVAP FAN HOT				
44C	EXTERIOR LTS-FOG & HAZARD	59V	ENGINE CTR-HR KEY SW FEED	7WF	A/C & HEAT SYSTEM-COND FAN CTR	19H	WORLD TRANSH-RETARDER INDICATOR				
45B	A/C & HEAT SYSTEM-HEAT 3 SIGN	59W	ENGINE CTR-HR KEY SW FEED	7WH	A/C & HEAT SYSTEM-EVAP FAN HOT	19J	LAVATORY-FAN				
45C	A/C & HEAT SYSTEM-WATER VALVE	59X	ENGINE CTR-HR KEY SW FEED	7WJ	A/C & HEAT SYSTEM-COND FAN HOT	19L	GALLEY-LAMP				
45E	A/C & HEAT SYSTEM-HEAT 1 SIGN	59Y	ENGINE CTR-HR KEY SW FEED	7X	PARKING BRAKE SW, STOP WCL	19W	WORLD TRANSH-RETARDER INDICATOR				
45F	A/C & HEAT SYSTEM-HEAT 2 SIGN	59Z	ENGINE CTR-HR KEY SW FEED	7Y	PARKING BRAKE SW, STOP WCL	20	SPEED - NEGATIVE SIGN				
45G	A/C & HEAT SYSTEM-WATER VALVE	59AA	ENGINE CTR-HR KEY SW FEED	7Z	PARKING BRAKE SW, STOP WCL	20A	WORLD TRANSH-RETARDER PRESS SW				
45H	A/C & HEAT SYSTEM-HEAT 1 SIGN	59BB	ENGINE CTR-HR KEY SW FEED	7Z	BATTERY EQUALIZER-CHECK BALANCE	20B	SPEED - NEGATIVE SIGN				
45J	A/C & HEAT SYSTEM-HEAT 2 SIGN	59CC	ENGINE CTR-HR KEY SW FEED	7Z	BATTERY EQUALIZER-CHECK BALANCE	20C	SPEED - NEGATIVE SIGN				
46A	EXTERIOR LTS-MARKER	7AA	EXTERIOR LTS-HARNER	7AA	ENGINE BRAKE & RETARDER SYSTEM	20D	SPEED - NEGATIVE SIGN				
		7BB	EXTERIOR LTS-HARNER	7G	EXTERIOR LTS-DOCKING	20E	SPEED - NEGATIVE SIGN				
		7CC	EXTERIOR LTS-HARNER	7GG	EXTERIOR LTS-DOCKING	20F	SPEED - NEGATIVE SIGN				
		7D	EXTERIOR LTS-DOCKING	7GG	EXTERIOR LTS-DOCKING	20G	SPEED - NEGATIVE SIGN				
		7DD	EXTERIOR LTS-DOCKING	7GG	EXTERIOR LTS-DOCKING	20H	SPEED - NEGATIVE SIGN				
		7E	EXTERIOR LTS-DOCKING	7GG	EXTERIOR LTS-DOCKING	20J	SPEED - NEGATIVE SIGN				
		7EE	EXTERIOR LTS-DOCKING	7GG	EXTERIOR LTS-DOCKING	20K	SPEED - NEGATIVE SIGN				
		7F	EXTERIOR LTS-DOCKING	7GG	EXTERIOR LTS-DOCKING	20L	SPEED - NEGATIVE SIGN				
		7FF	EXTERIOR LTS-DOCKING	7GG	EXTERIOR LTS-DOCKING	20M	SPEED - NEGATIVE SIGN				
		7G	EXTERIOR LTS-DOCKING	7GG	EXTERIOR LTS-DOCKING	20N	SPEED - NEGATIVE SIGN				
		7GG	EXTERIOR LTS-DOCKING	7GG	EXTERIOR LTS-DOCKING	20P	SPEED - NEGATIVE SIGN				
		7GG	EXTERIOR LTS-DOCKING	7GG	EXTERIOR LTS-DOCKING	20R	SPEED - NEGATIVE SIGN				
		7GG	EXTERIOR LTS-DOCKING	7GG	EXTERIOR LTS-DOCKING	20S	SPEED - NEGATIVE SIGN				
		7GG	EXTERIOR LTS-DOCKING	7GG	EXTERIOR LTS-DOCKING	20T	SPEED - NEGATIVE SIGN				
		7GG	EXTERIOR LTS-DOCKING	7GG	EXTERIOR LTS-DOCKING	20U	SPEED - NEGATIVE SIGN				
		7GG	EXTERIOR LTS-DOCKING	7GG	EXTERIOR LTS-DOCKING	20V	SPEED - NEGATIVE SIGN				
		7GG	EXTERIOR LTS-DOCKING	7GG	EXTERIOR LTS-DOCKING	20W	SPEED - NEGATIVE SIGN				
		7GG	EXTERIOR LTS-DOCKING	7GG	EXTERIOR LTS-DOCKING	20X	SPEED - NEGATIVE SIGN				
		7GG	EXTERIOR LTS-DOCKING	7GG	EXTERIOR LTS-DOCKING	20Y	SPEED - NEGATIVE SIGN				
		7GG	EXTERIOR LTS-DOCKING	7GG	EXTERIOR LTS-DOCKING	20Z	SPEED - NEGATIVE SIGN				
		7GG	EXTERIOR LTS-DOCKING	7GG	EXTERIOR LTS-DOCKING	20AA	SPEED - NEGATIVE SIGN				
		7GG	EXTERIOR LTS-DOCKING	7GG	EXTERIOR LTS-DOCKING	20BB	SPEED - NEGATIVE SIGN				
		7GG	EXTERIOR LTS-DOCKING	7GG	EXTERIOR LTS-DOCKING	20CC	SPEED - NEGATIVE SIGN				
		7GG	EXTERIOR LTS-DOCKING	7GG	EXTERIOR LTS-DOCKING	20DD	SPEED - NEGATIVE SIGN				
		7GG	EXTERIOR LTS-DOCKING	7GG	EXTERIOR LTS-DOCKING	20EE	SPEED - NEGATIVE SIGN				
		7GG	EXTERIOR LTS-DOCKING	7GG	EXTERIOR LTS-DOCKING	20FF	SPEED - NEGATIVE SIGN				
		7GG	EXTERIOR LTS-DOCKING	7GG	EXTERIOR LTS-DOCKING	20GG	SPEED - NEGATIVE SIGN				
		7GG	EXTERIOR LTS-DOCKING	7GG	EXTERIOR LTS-DOCKING	20HH	SPEED - NEGATIVE SIGN				
		7GG	EXTERIOR LTS-DOCKING	7GG	EXTERIOR LTS-DOCKING	20JJ	SPEED - NEGATIVE SIGN				
		7GG	EXTERIOR LTS-DOCKING	7GG	EXTERIOR LTS-DOCKING	20KK	SPEED - NEGATIVE SIGN				
		7GG	EXTERIOR LTS-DOCKING	7GG	EXTERIOR LTS-DOCKING	20LL	SPEED - NEGATIVE SIGN				
		7GG	EXTERIOR LTS-DOCKING	7GG	EXTERIOR LTS-DOCKING	20MM	SPEED - NEGATIVE SIGN				
		7GG	EXTERIOR LTS-DOCKING	7GG	EXTERIOR LTS-DOCKING	20NN	SPEED - NEGATIVE SIGN				
		7GG	EXTERIOR LTS-DOCKING	7GG	EXTERIOR LTS-DOCKING	20PP	SPEED - NEGATIVE SIGN				
		7GG	EXTERIOR LTS-DOCKING	7GG	EXTERIOR LTS-DOCKING	20QQ	SPEED - NEGATIVE SIGN				
		7GG	EXTERIOR LTS-DOCKING	7GG	EXTERIOR LTS-DOCKING	20RR	SPEED - NEGATIVE SIGN				
		7GG	EXTERIOR LTS-DOCKING	7GG	EXTERIOR LTS-DOCKING	20SS	SPEED - NEGATIVE SIGN				
		7GG	EXTERIOR LTS-DOCKING	7GG	EXTERIOR LTS-DOCKING	20TT	SPEED - NEGATIVE SIGN				
		7GG	EXTERIOR LTS-DOCKING	7GG	EXTERIOR LTS-DOCKING	20UU	SPEED - NEGATIVE SIGN				
		7GG	EXTERIOR LTS-DOCKING	7GG	EXTERIOR LTS-DOCKING	20VV	SPEED - NEGATIVE SIGN				
		7GG	EXTERIOR LTS-DOCKING	7GG	EXTERIOR LTS-DOCKING	20WW	SPEED - NEGATIVE SIGN				
		7GG	EXTERIOR LTS-DOCKING	7GG	EXTERIOR LTS-DOCKING	20XX	SPEED - NEGATIVE SIGN				
		7GG	EXTERIOR LTS-DOCKING	7GG	EXTERIOR LTS-DOCKING	20YY	SPEED - NEGATIVE SIGN				
		7GG	EXTERIOR LTS-DOCKING	7GG	EXTERIOR LTS-DOCKING	20ZZ	SPEED - NEGATIVE SIGN				
		7GG	EXTERIOR LTS-DOCKING	7GG	EXTERIOR LTS-DOCKING	20AAA	SPEED - NEGATIVE SIGN				
		7GG	EXTERIOR LTS-DOCKING	7GG	EXTERIOR LTS-DOCKING	20BBB	SPEED - NEGATIVE SIGN				
		7GG	EXTERIOR LTS-DOCKING	7GG	EXTERIOR LTS-DOCKING	20CCC	SPEED - NEGATIVE SIGN				
		7GG	EXTERIOR LTS-DOCKING	7GG	EXTERIOR LTS-DOCKING	20DDD	SPEED - NEGATIVE SIGN				
		7GG	EXTERIOR LTS-DOCKING	7GG	EXTERIOR LTS-DOCKING	20EEE	SPEED - NEGATIVE SIGN				
		7GG	EXTERIOR LTS-DOCKING	7GG	EXTERIOR LTS-DOCKING	20FFF	SPEED - NEGATIVE SIGN				
		7GG	EXTERIOR LTS-DOCKING	7GG	EXTERIOR LTS-DOCKING	20GGG	SPEED - NEGATIVE SIGN				
		7GG	EXTERIOR LTS-DOCKING	7GG	EXTERIOR LTS-DOCKING	20HHH	SPEED - NEGATIVE SIGN				
		7GG	EXTERIOR LTS-DOCKING	7GG	EXTERIOR LTS-DOCKING	20JJJ	SPEED - NEGATIVE SIGN				
		7GG	EXTERIOR LTS-DOCKING	7GG	EXTERIOR LTS-DOCKING	20KKK	SPEED - NEGATIVE SIGN				
		7GG	EXTERIOR LTS-DOCKING	7GG	EXTERIOR LTS-DOCKING	20LLL	SPEED - NEGATIVE SIGN				
		7GG	EXTERIOR LTS-DOCKING	7GG	EXTERIOR LTS-DOCKING	20MMM	SPEED - NEG

CIRCUIT NUMBER CODE — Page E : 1

No.	SYSTEM	No.	SYSTEM	No.	SYSTEM	No.	SYSTEM
0	IC - INVERTER CPT GRD	0RH	RS - RR END LAMPS RH GRD	11C	FR DESTINATION SIGN	21B	EXTERIOR LTS-HAZARD
0I	GALLEY GRD	0S2	SOUND SYSTEM RADIO GRD	11D	FR DESTINATION SIGN	21C	EXTERIOR LTS-CORNERING LH
0J	BG - BAT, CPT GRD	0S3	SOUND SYSTEM VIDEO GRD	11E	FR DESTINATION SIGN	21H	EXTERIOR LTS-DIRECTIONAL LH
0J	CONDENSER CPT GRD	0S5	SOUND SYSTEM BATT. GRD	11H	FR DESTINATION SIGN	21K	EXTERIOR LTS-CORNERING
0K	A/C - A/C CPT BOX GRD	0W55	SOUND SYSTEM BATT. GRD	12	BAT CPT 24V BATTERY	21L	EXTERIOR LTS-CORNERING LH
0L	GALLEY GRD	0W	FR - LOG, CPT HOLDERS GRD	12A	FR JRCT BOX 12V DISC SW	21P	EXTERIOR LTS-CORNERING LH
0M	GALLEY CPT BOX GRD	0W	FR - LOG, CPT HOLDERS GRD	12B	FR JRCT BOX 12V DISC SW	21R	EXTERIOR LTS-DIRECTIONAL RH
0N	GALLEY GRD	0W	FR - FR DEF BOX CPT GRD STUD	12C	FR JRCT BOX 12V DISC SW	23	EXTERIOR LTS-DIRECTIONAL RH
0P	VIDEO GRD	0W4	BATTERY TO EQUALIZER BY	12H	FR JRCT BOX 12V DISC SW	23A	EXTERIOR LTS-DIRECTIONAL RH
0W	A/C - A/C JCT BOX GRD	0W	FR - UNDER DASH CENT GRD	12K	FR JRCT BOX 12V DISC SW	23K	EXTERIOR LTS-DIRECTIONAL RH
0W	FRS - FR ROOF ACCESS, GRD	0W	RS - RR JCT BOX GRD	12R	12V JRCT BOX 12V JCT BLOCK	23P	EXTERIOR LTS-CORNERING RH
0W	RS - LOG, CPT HOLDERS GRD	0W	RS - RR JCT BOX GRD	12W	BAT. EQUALIZER BATTERY	23W	EXTERIOR LTS-CORNERING RH
0W	AJB - ALARM JCT BOX GRD	0WC	RS - RR JCT BOX GRD WCL	12S	FR JCT BOX 12V DISC SW	23W	EXTERIOR LTS-CORNERING RH
0W	AJB - ALARM JCT BOX GRD	0WC	RS - RR JCT BOX GRD WCL	12T	FR JCT BOX 12V DISC SW	24	EXTERIOR LTS-HAZARD
0WA	RS - VOLTAGE REGULATOR GRD	0Y	FR - HOT WATER HEATER GRD	12U	FR JCT BOX 12V DISC SW	24A	BOOSTER BLOCK 24V DISC SW
0X	EC - ENGINE GRD	0Y	RS - RR JCT BOX GRD	12V	FR JCT BOX 12V DISC SW	24H	RR JCT BOX 24V DISC SW
0X	FRS - FR ROOF HEAT WIND GRD	0Y2	FR JCT BOX 12V DISC SW	12Y	FR JCT BOX 12V DISC SW	24K	FR JCT BOX 24V DISC SW
0Y	FS - FR ROOF ACCESS, GRD	0Y	RR JCT BOX GRD	12Z	FR JCT BOX 12V DISC SW	24P	FR JCT BOX 24V DISC SW
0Y	RS - LOG, CPT ACCESS, GRD	0Y	RR JCT BOX GRD	12F	BAT CPT 24V F.B.R.	24R	FR JCT BOX 24V DISC SW
0Y	RS - A/C JCT BOX GRD	0Y	ABS FR JCT BOX GRD STUD	12H	RR JCT BOX 12V IGNITION	24S	CHARGE STATE-VOLTAGE REGUL.+T
0Y	RS - A/C JCT BOX GRD	0Y	FR - FR DEF BOX CPT GRD STUD	12K	FR JCT BOX 12V IGNITION	24W	ALARM-ELEC.-HORN HOT WIRE
0Z	RUB - BAT/EQUAL.-BAT GRD	0Z	FR JCT BOX 12V DISTRIBUTION	12P	FR JCT BOX 12V IGNITION	24W	ALARM-ELEC.-HORN HOT WIRE
0Z	EC - STARTER MOTOR GRD	0Z	RR JCT BOX CPT GRD STUD	12R	FR JCT BOX 12V IGNITION	24C	FR JCT BOX 24V DISC SW
0Z	BAT.EQUALIZER GRD	0W	RR JCT BOX CPT GRD STUD	12S	12V JCT BOX 12V DISTRIBUTION	24D	RR JCT BOX 24V DISC SW
1	TACHO SYSTEM	1	TACHO SYSTEM	12T	FR JCT BOX 12V IGNITION	24E	RR JCT BOX 24V HOT WIRE
2	RS - ENGINE ACCESS, GRD	2	RS - ENGINE ACCESS, GRD	12U	FR JCT BOX 12V IGNITION	24F	RR JCT BOX 24V HOT WIRE
2	RDB - SPEED SW, BAT.S, GRD	2C	A/C & HEAT SYSTEM-LO PRESS SW	12V	INVERTER CPT 12V DISC SW	24GP	A/C JCT BOX 24V HOT WIRE
2CS	24V DISC, SW, RL/ GRD STUD	2H	HEADER BATTERY-RADIO GRD	12W	FR JCT BOX 12V DISC SW	24H	RR JCT BOX 24V DISC SW
2CS	24V DISC, SW, RL/ GRD STUD	2H	HEADER BATTERY-RADIO GRD	12X	FR JCT BOX 12V DISC SW	24J	RR JCT BOX 24V DISC SW
2D	FS - SERV. CPT ACCESS, GRD	2J	SOUND SYSTEM 12V RADIO	12S	SOUND SYSTEM 12V RADIO	24E	RR JCT BOX 24V DISC SW
2D	RS - ENGINE ACCESS, GRD	2J	SOUND SYSTEM 12V RADIO	12S1	SOUND SYSTEM 12V RADIO	24F	RR JCT BOX 24V DISC SW
2DF	RS - RR SIDE FLASH & MARK GRD	4C	HOSTESS CHIME	12S2	SOUND SYSTEM 12V RADIO	24F	RR JCT BOX 24V DISC SW
2E	FS - FR LAMPS GRD	4C	HOSTESS CHIME	12S3	SOUND SYSTEM 12V RADIO	24G	RR JCT BOX 24V DISC SW
2E	RS - HAT RACK ACCESS LH GRD	4E	UPPER WINDSHIELD DEFROSTER	12S4	SOUND SYSTEM 12V RADIO	24H	RR JCT BOX 24V DISC SW
2E	RS - HAT RACK ACCESS LH GRD	4E	UPPER WINDSHIELD DEFROSTER	12V	BAT CPT 12V F.B.R.	24J	RR JCT BOX 24V DISC SW
2EF	FRS - HEAD & CONNERS.LTS GRD	4H	12V HOT WIRE DISTRIBUTION	12W	BAT CPT 12V F.B.R.	24K	RR JCT BOX 24V DISC SW
2EF	RS - HAT RACK ACCESS, RH GRD	5N	INTERIOR LTS-EMERGENCY EXIT	12X	BAT CPT 12V F.B.R.	24L	RR JCT BOX 24V DISC SW
2EG	RS - HAT RACK ACCESS, RH GRD	5N	INTERIOR LTS-AISLE	12Y	12V IGNITION DISTRIBUTION	24M	RR JCT BOX 24V DISC SW
2G	FS - INSTR. PANEL LH GRD	7A	SPEED SW 5 MPH N/O	12VE	12V IGNITION DISTRIBUTION	24N	RR JCT BOX 24V DISC SW
2H	FS - INSTR. PANEL CENT GRD	7B	ENTRANCE DOOR (SEDAN)	12VR	BAT CPT 12V DISC SW	24R	RR JCT BOX 24V DISC SW
2H	RS - LAVATORY ACCESS, GRD	7C	ENTRANCE DOOR (SEDAN)	12W	12V BATTERY: DDEC III	24GB	FR JCT BOX 24V IGNITION
2J	FS - SW CONSOLE, LH GRD	7D	ENTRANCE DOOR (SEDAN)	12X	FR JCT BOX 12V DISC SW	24GC	FR JCT BOX 24V IGNITION
2J	FS - SW CONSOLE, LH GRD	7DA	FR JCT BOX 12V DISC SW	12Z	FR JCT BOX 12V DISC SW	24GD	FR JCT BOX 24V IGNITION
2J	RS - RR ROOF ACCESS, GRD	7DB	ENTRANCE DOOR (SEDAN)	12Z2	FR JCT BOX 12V DISC SW	24GD	FR JCT BOX 24V IGNITION
2K	RS - RR ROOF ACCESS, GRD	7E	ENTRANCE DOOR (SEDAN)	13	ALARM & SIGNAL-HD AIR PRSN.	24J	FR JCT BOX 24V DISC SW
2L	RS - ENGINE CPT ACCES, GRD	9	INTERIOR LTS-ENGINE CPT	13A	ALARM & SIGNAL-HD AIR PRSN.	24K	FR JCT BOX 24V DISC SW
2L	RS - LAVATORY ACCESS, GRD	9A	FS - UNDER DASH RH GRD	13B	ALARM & SIGNAL-HD AIR PRSN.	24L	FR JCT BOX 24V DISC SW
2L-A	ENTRANCE DOOR (SEDAN) GRD	9B	ENGINE DOOR ALARM T.L.T.	14	LAVATORY-FLUSHING PUMP	24P	FR JCT BOX 24V DISC SW
2M	RS - ENGINE CPT ACCES, GRD	9C	INTERIOR LTS-FR SERVICE CPT	15	EXTERIOR LTS-MAIN LTS FUNC.LEVEL	24R	FR JCT BOX 24V DISC SW
2M	RS - ENGINE CPT ACCES, GRD	9D	INTERIOR LTS-FR SERVICE CPT	15	EXTERIOR LTS-MAIL T.FUNC.LEVEL	24S	24V DISC SW RL/ SIGNAL
2M	FS - UNDER DASH RH GRD	10	INTERIOR LTS-LUGGAGE CPT	15A	WIPER & WASHER UPPER WINDSHIELD	24SI	SOUND SYSTEM 24V AMPLIFIER
2MR	24V DISC, SW, RL/ GRD STUD	10B	INTERIOR LTS-LUGGAGE CPT	16	SPEED - TRANSITHER	24SI	SOUND SYSTEM 24V AMPLIFIER
2MHS	24V DISC, SW, RL/ GRD STUD	10B	INTERIOR LTS-LUGGAGE CPT	16S	SPEED - TRANSITHER	24S4	SOUND SYSTEM 24V VIDEO
2N	FS - UNDER DASH RH GRD	10C	INTERIOR LTS-LUGGAGE CPT	17	SPEED - TRANSITHER	24S4	SOUND SYSTEM 24V VIDEO
2N	RS - ENGINE CPT ACCES, GRD	10D	INTERIOR LTS-LUGGAGE CPT	17	EXTERIOR LTS-FLASHER UNIT	24SB	SOUND SYSTEM 24V FEEDING
2N	RS - ENGINE CPT ACCES, GRD	10E	INTERIOR LTS-LUGGAGE CPT	17A	EXTERIOR LTS-FLASHER UNIT	24SB	SOUND SYSTEM 24V FEEDING
2P	RS - ENGINE CPT ACCES, GRD	10F	INTERIOR LTS-LUGGAGE CPT	17F	DIFFERENTIAL OIL SIGN-TRANS.	24J	RR JCT BOX 24V DISC SW
2P	FS - UNDER DASH LH GRD	10P	INTERIOR LTS-LUGGAGE DOOR AJAR	20	SPEED - NEGATIVE SIGN	24W2	RR JCT BOX 24V DISC SW
2P	FS - UNDER DASH CENT GRD	20T	SPEED - NEGATIVE SIGN	20T	SPEED - NEGATIVE SIGN	24W3	RR JCT BOX 24V DISC SW
2R	FS - SOUND SYS, JCT PANEL GRD	11A	FR DESTINATION SIGN	21	EXTERIOR LTS-DIRECTIONAL LH	24W4	RR JCT BOX 24V DISC SW
2RE	RADIO ELTR., HEAD CHASSIS GRD	11B	FR DESTINATION SIGN	21A	EXTERIOR LTS-DIRECTIONAL LH	24W5	RR JCT BOX 24V DISC SW

CIRCUIT NUMBER CODE — Page E : 2

No.	SYSTEM	No.	SYSTEM	No.	SYSTEM	No.	SYSTEM
24V0	24V HOT WIRE DISTRIBUTION	45D	A/C & HEAT SYSTEM-WATER VALVE	7D	INTERIOR LTS-HAT RACK & RR RUN.	75A	DDEC-FAST IDLE SIGNAL
24VF	BAT CPT 24V SW TO F.B & IC	45E	A/C & HEAT SYSTEM-HEAT 1 SIGN	71	EXTERIOR LTS-DOCKING	76W	PARKING BRAKE SW. SIGNL (WCL)
24VF	INVERTER CPT 24V DISC SW	45H	A/C & HEAT SYSTEM-DRIVER'S HTR	71D	EXTERIOR LTS-DOCKING	92	BATTERY EQUALIZER-CHECK ALTERNATOR
24VH	BATTERY TO EQUALIZER 24V	45H	A/C & HEAT SYSTEM-DRIVER'S HTR	71E	EXTERIOR LTS-DOCKING	93	BATTERY EQUALIZER-CHECK LO.HV
24VI	RR JCT BOX 24V IGNITION	45W	A/C & HEAT SYSTEM-DRIVER'S HTR	71F	EXTERIOR LTS-DOCKING	95A	ENGINE BRAKE & RETARDER SYSTEM
24VR	BAT CPT 24V DISC SW TO RDB	46	EXTERIOR LTS-MARKER	71G	EXTERIOR LTS-DOCKING	97	THERMOSTAT
24VR	BAT CPT 24V DISC SW TO RDB	46A	EXTERIOR LTS-MARKER	71H	EXTERIOR LTS-DOCKING	100	INTERIOR LTS-GENERAL
24W2	BATT.CPT 12-HOLD PUMP (WCL)	46B	EXTERIOR LTS-MARKER	72	SUN VISOR-RH	100A	INTERIOR LTS-GENERAL
24W4	24V BATTERY-HYDUPUMP (WCL)	46B	EXTERIOR LTS-MARKER	72A	SUN VISOR-RH	100B	INTERIOR LTS-GENERAL
24X1	FR JCT BOX 24V DISC SW	46H	EXTERIOR LTS-MARKER	72C	SUN VISOR-LH	101	24V STARTER SOL. FEEDING
24X2	FR JCT BOX 24V DISC SW	47	A/C & HEAT SYSTEM-DRIVER'S HTR	73	SUN VISOR-LH	102	WORLD TRANSMI-LO SIGNAL SOL. LO
24Y2	FR JCT BOX 24V DISC SW	48	EXTERIOR LTS-MARKER	73	LAVATORY-FEEDING	102	24V CUTOUT RELAY-STARTER
24Z2	FR JCT BOX 24V DISC SW	48A	ENTRANCE DOOR (SEDAN)	73A	LAVATORY-FEEDING RH	102	WORLD TRANSMI-SOL. (WCL)
25	HOT DATA-ELECTRIC CLOCK	48B	ENTRANCE DOOR (SEDAN)	73B	LAVATORY-FEEDING RH	103	WORLD TRANSMI-SOL.
25A	HOT DATA-ELECTRIC CLOCK	48C	ENTRANCE DOOR (SEDAN)	74D	INTERIOR LTS-READING SIGNAL	104	WORLD TRANSMI-SOL.-FORWARD
25B	EXTERIOR LTS-DAYTIME RUN.LTS	48D	ENTRANCE DOOR (SEDAN)	74E	INTERIOR LTS-READING LH	105	WORLD TRANSMI-RETARDER & SUMP
26	DRIVER'S WINDOW LIFTER	48E	ENTRANCE DOOR (SEDAN)	75	INTERIOR LTS-READING LH	105W	WORLD TRANSMI-RETARDER & SUMP
26A	DRIVER'S WINDOW LIFTER	48F	ENTRANCE DOOR (SEDAN)	75A	INTERIOR LTS-READING LH	106	WORLD TRANSMI-SOL. (WCL)
26C	DRIVER'S WINDOW LIFTER	50	AIR DRYER	76	FUEL TANK-GAUGE	107	CHARG.STATE-VOLTAGE REGUL.+T
26D	DRIVER'S WINDOW LIFTER	53	ALARM & SIGNAL-ELEC. HORN	76B	LOW FUEL LT & ETHER COLD START	108	WORLD TRANSMI-SOL. (WCL)
26H	A/C & HEAT SYSTEM-DRIVER'S HTR	53A	ALARM & SIGNAL-ELEC. HORN	76C	FUEL PRIME PUMP	109	WORLD TRANSMI-SOL. (WCL)
27H	A/C & HEAT SYSTEM-DRIVER'S HTR	53B	ALARM & SIGNAL-ELEC. HORN	76F	FUEL PRIME PUMP	109	WORLD TRANSMI-RET.-SOL. LO
27W	A/C & HEAT SYSTEM-DRIVER'S HTR	53C	WIPER & WASHER SYSTEM	77A	A/C & HEAT SYSTEM-HI PRESSURE	110	WORLD TRANSMI-12V IGNITION
28	A/C & HEAT SYSTEM-DRIVER'S HTR	53K	WIPER & WASHER SYSTEM	77C	A/C & HEAT SYSTEM-DRIVER'S HTR	110	WORLD TRANSMI-LOCKUP SOL. LO
28A	A/C & HEAT SYSTEM-DRIVER'S HTR	53L	WIPER & WASHER SYSTEM	77D	A/C & HEAT SYSTEM-COMPRESSOR	112	WORLD TRANSMI-SOL.
30A	A/C & HEAT SYSTEM-UNLOADER	53K	WIPER & WASHER SYSTEM	77C	A/C & HEAT SYSTEM-COMPRESSOR	112	WORLD TRANSMI-STARTER OUTPUT (+)
30B	A/C & HEAT SYSTEM-UNLOADER	53M	WIPER & WASHER SYSTEM	77E	A/C & HEAT SYSTEM-COMPRESSOR	113	WORLD TRANSMI-SOL. (WCL)
30C	A/C & HEAT SYSTEM-UNLOADER	53N	WIPER & WASHER SYSTEM	78	EXTERIOR LTS-STOP SIGNAL	114	WORLD TRANSMI-PURGE SWITCH
30D	A/C & HEAT SYSTEM-UNLOADER	53P	WIPER & WASHER SYSTEM	82	EXTERIOR LTS-STOP SIGNAL	114A	WORLD TRANSMI-SOL. (WCL)
30E	WIPER & WASHER SYSTEM	53T	WIPER & WASHER SYSTEM	82B	EXTERIOR LTS-STOP LTS	114A	INTERIOR LTS-DASH L.T.
30F	WIPER & WASHER SYSTEM	53U	WIPER & WASHER SYSTEM	82C	EXTERIOR LTS-STOP LTS-TAIL BRK	114B	WORLD TRANSMI-RET.-SOL.
30G	WIPER & WASHER SYSTEM	57A	A/C & HEAT SYSTEM-WATER PUMP	82L	EXTERIOR LTS-LH STOP	114B	INTERIOR LTS-DASH L.T. REGUL.
30H	WIPER & WASHER SYSTEM	57B	A/C & HEAT SYSTEM-WATER PUMP	82R	EXTERIOR LTS-RH STOP	114C	WORLD TRANSMI-RET.-SOL.
30J	WIPER & WASHER SYSTEM	57C	PRE-HEAT WATER HEATER	83	ENGINE CTRL-SHUTDOWN	115	INTERIOR LTS & SIGNAL-ENGINE
30K	WIPER & WASHER SYSTEM	57D	PRE-HEAT WATER HEATER	83A	ENGINE CTRL-SHUTDOWN	115	DDEC III-COOLANT LEVEL
30L	WIPER & WASHER SYSTEM	57E	PRE-HEAT WATER HEATER	84	ENGINE CTRL-SW START SIGN	115A	GALLEY-FRIDGE-APPL. SOL.-HI
30M	WIPER & WASHER SYSTEM	57F	PRE-HEAT WATER HEATER	84A	ENGINE CTRL-SW START SIGN	115C	DDEC III-COOLANT LEVEL
30N	WIPER & WASHER SYSTEM	57G	PRE-HEAT WATER HEATER	85	24V IGNITION SIGNAL	115D	DDEC III-COOLANT LEVEL
30P	WIPER & WASHER SYSTEM	57H	PRE-HEAT WATER HEATER	85A	24V DASH INSTRUMENTATION	116	WORLD TRANSMI-PRE SHIFT SIGNAL
35B	ENTRANCE DOOR (SEDAN)	61	EXTERIOR LTS-24V FEED SW	85B	ENGINE CTRL-24V IGNITION	116	WORLD TRANSMI-LO SIGNAL SOL. HI
35C	ENTRANCE DOOR (SEDAN)	61A	EXTERIOR LTS-24V FEED SW	85C	ENGINE CTRL-24V IGNITION	117	WORLD TRANSMI-SHIFT SOL. LO
35D	ENTRANCE DOOR (SEDAN)	61B	EXTERIOR LTS-24V FEED SW	85F	ENGINE CTRL-ENGINE CTRL SW IGN	117A	WORLD TRANSMI-APPL. SOL.-HI
36	JACOB BRAKE SYSTEM	62	LAVATORY-FLUOR'LT	85G	24V IGN ANTI SKID	117A	ALARM & SIGNAL-TRANSM-OIL TEMP
36A	JACOB BRAKE SYSTEM	62A	LAVATORY-FLUOR'LT	85H	24V IGN ANTI SKID	118	WORLD TRANSMI-SHIFT SOL. LO
38	INTERIOR LTS-24V FLUORESCENT	62B	LAVATORY-FLUOR'LT	85J	24V IGN ANTI SKID	118	WORLD TRANSMI-SHIFT SOL. HI
38A	INTERIOR LTS-24V FLUORESCENT	63	EXTERIOR LTS-CLEARANCE	86	ENGINE CTRL-STARTER SOL. SIGN	119	WORLD TRANSMI-SOL. (WCL)
38C	INTERIOR LTS-24V FLUORESCENT	63A	EXTERIOR LTS-CLEARANCE	86A	ENGINE CTRL-STARTER SOL. SIGN	120	WORLD TRANSMI-SOL. (WCL)
38D	INTERIOR LTS-24V FLUORESCENT	63B	EXTERIOR LTS-CLEARANCE	86B	ENGINE CTRL-RR START SIGNAL	121	WORLD TRANSMI-SOL. (WCL)
39	INTERIOR LTS-24V LH CONSOLE SW	63C	EXTERIOR LTS-MARKER & TAIL	87	ENGINE CTRL-RR START SIGNAL	122	A/C & HEAT SYSTEM-DRIVER'S HTR
39A	INTERIOR LTS-DRIVER'S LTS	63D	EXTERIOR LTS-MARKER & TAIL	90A	A/C & HEAT SYSTEM-COND FAN MOT	122A	A/C & HEAT SYSTEM-FRESH AIR
41	A/C & HEAT SYSTEM-COND FAN MOT	63E	EXTERIOR LTS-MARKER BLINKER	90B	A/C & HEAT SYSTEM-COND FAN MOT	123	WORLD TRANSMI-NEUTRAL START
41A	A/C & HEAT SYSTEM-COND FAN MOT	63F	EXTERIOR LTS-TAIL	90C	A/C & HEAT SYSTEM-COND FAN MOT	123A	ALARM & SIGNAL-F.ENE DETECTION
42	A/C & HEAT SYSTEM-COND FAN MOT	63G	EXTERIOR LTS-TAIL	90D	A/C & HEAT SYSTEM-COND FAN MOT	124	WORLD TRANSMI-THROTTLE SIGNAL
42A	A/C & HEAT SYSTEM-COND FAN MOT	63H	EXTERIOR LTS-TAIL	90E	A/C & HEAT SYSTEM-COND FAN MOT	124A	WORLD TRANSMI-THROTTLE SIGNAL
44A	EXTERIOR LTS-FOG	67	A/C & HEAT SYSTEM & HEAT WINDL	90F	A/C & HEAT SYSTEM-COND FAN MOT	125	WORLD TRANSMI-RETARDER INDICATOR
44B	EXTERIOR LTS-FOG	67A	A/C & HEAT SYSTEM & HEAT WINDL	90G	A/C & HEAT SYSTEM-COND FAN MOT	125	GALLEY-LIGHT
44C	EXTERIOR LTS-FOG & HAZARD	67C	A/C & HEAT SYSTEM-COND FAN CTRL	90J	A/C & HEAT SYSTEM-COND FAN MOT	125A	WORLD TRANSMI-RETARDER INDICATOR
44K	A/C & HEAT SYSTEM-WATER VALVE	67D	A/C & HEAT SYSTEM-WATER VALVE	90K	A/C & HEAT SYSTEM-COND FAN MOT		

CIRCUIT NUMBER CODE — Page E : 3

No.	SYSTEM	No.	SYSTEM	No.	SYSTEM	No.	SYSTEM
126	WORLD TRANSMI-LUBE PRESS SW.	137G	RR VIEW MIRROR-(SPARTAN)	162	WORLD TRANSMI-PRESS. SW C3	320B	DOOR AJAR ALARM (WCL)
126	KNEELING SYSTEM	138	WORLD TRANSMI-RETARDER ENABLE	163	POWER SYSTEM SW. (WCL)	320C	DOOR AJAR T.T.& T.(WCL)
126	KNEELING SYSTEM	138	ABS SYSTEM	164	WORLD TRANSMI-RET.ACTUATOR SIGN	320A	DOOR AJAR T.T.& T.(WCL)
126A	KNEELING SYSTEM	139A	ABS SYSTEM	165	WORLD TRANSMI-OIL LEVEL SIGNAL	320D	DOOR AJAR HOOD(WCL)
126C	KNEELING SYSTEM	139	WORLD TRANSMI-OUTPUT SPEED HI	165	A/C & HEAT SYSTEM-TRANSMITER	323	REMOTE WALL SW. OFF (WCL)
126D	KNEELING SYSTEM	139	ABS SYSTEM	165A	A/C & HEAT SYSTEM-TRANSMITER	324	REMOTE WALL SW. OFF (WCL)
126E	KNEELING SYSTEM	140	WORLD TRANSMI-OUTPUT SPEED LO	165B	A/C & HEAT SYSTEM-TRANSMITER	325	REMOTE WALL SW. ON (WCL)
126F	KNEELING SYSTEM	140	ABS SYSTEM	165C	A/C & HEAT SYSTEM-TRANSMITER	325A	DOOR, BRAKE SAFETY SW. (WCL)
126G	KNEELING SYSTEM	141	WORLD TRANSMI-ENGINE SPEED HI	165D	A/C & HEAT SYSTEM-EVAP. HOD.	326	CONTROL SYSTEM (WCL) RECIVER
126H	KNEELING SYSTEM	141	ABS SYSTEM	166	A/C & HEAT SYSTEM-TEMP.	326	CONTROL SYSTEM (WCL) RECIVER
126J	KNEELING SYSTEM	142	WORLD TRANSMI-SERIAL COM.+	167A	A/C & HEAT SYSTEM-TEMP.CTR	328	CONTROL SYSTEM (WCL) RECIVER
126K	KNEELING SYSTEM	143	WORLD TRANSMI-ECU	167B	A/C & HEAT SYSTEM-INTERFACE (+)	329	24V CUTOUT RELAY-STARTER
126S	KNEELING SYSTEM	143	WORLD TRANSMI-ECU BATTERY GRD	168	A/C & HEAT SYSTEM-HUMIDISTAT	417	DDEC III-LIMIT SPEED GOVERNOR
126T	KNEELING SYSTEM	144	WORLD TRANSMI-ECU	169	A/C & HEAT SYSTEM-HUMIDISTAT	417	DDEC III-LIMIT SPEED GOVERNOR
126W	KNEELING SYSTEM	145	WORLD TRANSMI-ECU	170	LUGGAGE REDRIVE BATTERY	440	DDEC III-12V IGNITION
126Y	KNEELING SYSTEM (WCL)	145	WORLD TRANSMI-ECU CHASSIS GRD	170A	LUGGAGE DOOR LOCK	440A	DDEC III-12V IGNITION
127	WORLD TRANSMI-RETARDER FEED SOL.	146	WORLD TRANSMI-ECU	170H	LUGGAGE DOOR LOCK	451	DDEC III-A/C FAN CLUTCH
127A	PRE-HEAT WATER HEATER	147	WORLD TRANSMI-ECU	170J	LUGGAGE DOOR LOCK	452	DDEC III-HORNS-DIST. DRIVE
127B	PRE-HEAT WATER HEATER	148	ABS SYSTEM	171	DIGITAL THERMOMETER	509	DDEC III-STOP ENGINE L.O.P.
127C	PRE-HEAT WATER HEATER	149	ABS SYSTEM	172	FUEL FILTER	509	DDEC III-STOP ENGINE L.O.P.
127D	WORLD TRANSMI-RETARDER	149	WORLD TRANSMI-IGNITION SENSE	173	FUEL FILTER	524	DDEC III-FAST IDLE SOLENOID
128	PRE-HEAT WATER HEATER	149A	WORLD TRANSMI-12V IGNITION	173B	FUEL WATER FILTER	525	DDEC III-FAST IDLE SIGNAL
128A	PRE-HEAT WATER HEATER	150	WORLD TRANSMI-12V IGNITION	174	WORLD TRANSMI-SPARE	531	DDEC III-CRUISE CLUTCH RELEASE
128B	PRE-HEAT WATER HEATER	150	WORLD TRANSMI-OIL TEMP	203	WORLD TRANSMI-SPARE	543	DDEC III-CRUISE STOP SW
129	PRE-HEAT WATER HEATER	151	ETHER COLD START	204	WORLD TRANSMI-SPARE	543	DDEC III-CRUISE STOP SW OUT IN
129A	PRE-HEAT WATER HEATER	151	WORLD TRANSMI-OIL	205	WORLD TRANSMI-SPARE	544	DDEC III-CRUISE STOP SW
129B	PRE-HEAT WATER HEATER	152	WORLD TRANSMI-OUTPUT SPEED LO	206	WORLD TRANSMI-SPARE	545	DDEC III-CRUISE STOP SW
130	WORLD TRANSMI-END GRB OUTPUT (+)	152	ABS SYSTEM	207	WORLD TRANSMI-BACK UP SIGNAL	555	DDEC III-FAN CLUTCH SPEED*
130A	WORLD TRANSMI-END GRB OUTPUT (+)	153	ABS SYSTEM	208	WORLD TRANSMI-SPARE	556	DDEC III-VEHICLE SPEED (+)
130W	WORLD TRANSMI-END BRK OUTPUT (+)	154	ABS SYSTEM	230W	NEUTRAL SIGNAL GRD (WCL)	557	DDEC III-VEHICLE SPEED (+)
131	GALLEY-HEAT CONTAINERS	155	ABS SYSTEM	241	DDEC III-CON 12V FEEDING	563	DDEC III-DATA LINK (+)
131	GALLEY-HEAT CONTAINERS	156	ABS SYSTEM	242	DDEC III-CON 12V FEEDING	564	DDEC III-DATA LINK (+)
131A	GALLEY-HEAT CONTAINERS	156A	ABS SYSTEM	250	DDEC III-ECM BATTERY GRD	565	DDEC III-DIGITAL OUT
131B	GALLEY-HEAT CONTAINERS	157	ABS SYSTEM	251	DDEC III-ECM BATTERY GRD	583	DDEC III-DATA LINK (+)
131C	GALLEY-HEAT CONTAINERS	157A	ABS SYSTEM	252	DDEC III-ECM BATTERY GRD	584	DDEC III-DATA LINK (+)
134	A/C & HEAT SYSTEM-WATER SENSOR	157B	ABS SYSTEM	253	DDEC III-ECM BATTERY GRD	920	DDEC III-DATA LINK (+)
134A	A/C & HEAT SYSTEM-WATER SENSOR	158	ABS SYSTEM	254	GALLEY-12V FRIGG NORCOLD	920	DDEC III-HYDRAULIC PWM* OUTPUT
135	WORLD TRANSMI-RETARDER TEMP	159	ABS SYSTEM	255	GALLEY-COFFEEMAKER	926	DDEC III-SENSOR RETURN
135A	A/C & HEAT SYSTEM-AIR SENSOR	159A	ABS SYSTEM	256	WINDSHIELD HEATED	952	DDEC III-SENSOR RETURN
135B	A/C & HEAT SYSTEM-AIR SENSOR	159B	ABS SYSTEM	257	WINDSHIELD HEATED	952	DDEC III-SENSOR RETURN
135C	WORLD TRANSMI-RETARDER TEMP	159C	ABS SYSTEM	257A	WINDSHIELD HEATED	1000	DDEC III-ENGINE BRAKE 2 CYL.
135D	WORLD TRANSMI-RETARDER HES HOD	159D	ABS SYSTEM	257B	WINDSHIELD HEATED	1000	DDEC III-ENGINE BRAKE 2 CYL.
135G	A/C & HEAT SYSTEM-AIR SENSOR	159E	ABS SYSTEM	257C	WINDSHIELD HEATED	1020	RR JCT BOX CPT BATT GRD
135J	A/C & HEAT SYSTEM-AIR SENSOR	159F	ABS SYSTEM	257D	WINDSHIELD HEATED SPARE	1020	RR JCT BOX CPT BATT GRD
136	WORLD TRANSMI-12V BATTERY	159G	ABS SYSTEM	257E	WINDSHIELD HEATED SPARE	8A	INTERIOR LTS-12V FLUORESCENT
136A	WORLD TRANSMI-12V BATTERY	159H	ABS SYSTEM	257F	WINDSHIELD HEATED	8B	INTERIOR LTS-12V FLUORESCENT
136B	WORLD TRANSMI-12V BATTERY	159J	ABS SYSTEM	258A	WINDSHIELD HEATED	31	SOUND SYSTEM-FR RH SPEAKER
136C	WORLD TRANSMI-12V BATTERY	159K	ABS SYSTEM	258B	WINDSHIELD HEATED	31A	SOUND SYSTEM-FR RH SPEAKER
136D	WORLD TRANSMI-12V BATTERY	159L	ABS SYSTEM	259A	WINDSHIELD HEATED	31B	SOUND SYSTEM-FR RH SPEAKER
137	HORROR (SPARTAN & RANCO)	159M	ABS SYSTEM	278	FAN CLUTCH RADIATOR	31C	SOUND SYSTEM-FR RH SPEAKER
137A	HORROR (SPARTAN & RANCO)	159N	ABS SYSTEM	279	FAN CLUTCH RADIATOR	31D	SOUND S

CIRCUIT NUMBER CODE — Page E : 1

No.	SYSTEM	No.	SYSTEM	No.	SYSTEM	No.	SYSTEM
0	IC - INVERTER CPT GRD	0RH	RS - RR END LAMPS RH GRD	11C	FR DESTINATION SIGN	21B	EXTERIOR LTS-HAZARD
0I	GALLEY GRD	0S2	SOUND SYSTEM RADIO GRD	11D	FR DESTINATION SIGN	21C	EXTERIOR LTS-CORNERING LH
0J	BC - BAT, CPT GRD	0S3	SOUND SYSTEM VIDEO GRD	11E	FR DESTINATION SIGN	21H	EXTERIOR LTS-DIRECTIONAL LH
0J	CONDENSER CPT GRD	0S5	SOUND SYSTEM BATT. GRD	11H	FR DESTINATION SIGN	21K	EXTERIOR LTS-CORNERING
0K	A/C - A/C CPT BDV GRD	0W55	SOUND SYSTEM BATT. GRD	12	BAT CPT 12V BATTERY	21L	EXTERIOR LTS-CORNERING LH
0L	GALLEY GRD	0W	FS - LOG.CPT ACCESS. GRD	12A	FR JRCT 12V DISC SW	21P	EXTERIOR LTS-CORNERING LH
0M	FS - BAT CPT BDV GRD	0X	FS - A/C CPT ACCESS. GRD	12B	FR JRCT 12V DISC SW	21R	EXTERIOR LTS-DIRECTIONAL RH
0P	GALLEY GRD	0Y	FS - FR BDY CPT GRD STUD	12C	FR JRCT 12V DISC SW	23	EXTERIOR LTS-DIRECTIONAL RH
0Q	VIDEO GRD	0W4	BATTERY TO EQUALIZER BY	12H	FR JRCT 12V DISC SW	23A	EXTERIOR LTS-DIRECTIONAL RH
0W	A/C - A/C JCT BDV GRD	0Z	FR - UNDER DASH CENT GRD	12K	FR JRCT 12V DISC SW	23B	EXTERIOR LTS-DIRECTIONAL RH
0W	FRS - FR ROOF ACCESS. GRD	0W	RS - RR JCT BDY	12R	12V JRCT 12V JCT BLOCK	23C	EXTERIOR LTS-CORNERING RH
0W	RS - LOG. CPT ACCESS. GRD	0WC	RS - RR JCT BDY GRD (WCL)	12S	BAT. EQUALIZER BY STUD	23H	EXTERIOR LTS-CORNERING RH
0W	AZB - ALARM JCT BDV GRD	0WC	RS - RR JCT BDY GRD (WCL)	12T	FR JCT 12V DISC SW	23P	EXTERIOR LTS-CORNERING RH
0W	AZB - ALARM JCT BDV GRD	0WD	BATTERY TO EQUALIZER NOT USED	12U	FR JCT 12V DISC SW	23R	EXTERIOR LTS-DIRECTIONAL RH
0WA	RR - VOLTAGE REGULATOR GRD	0Y	FRS - FR BDY CPT GRD STUD	12V	FR JCT 12V DISC SW	24	BOOSTER BLOCK 24V DISC SW
0X	EC - ENGINE GRD	0Y	RS - RR JCT BDY	12W	FR JCT 12V DISC SW	24A	FR JCT 24V DISC SW
0X	FRS - FR ROOF HEAT WIND GRD	0Y2	FR JCT BDY CPT GRD STUD	12X	FR JCT 12V DISC SW	24B	FR JCT 24V DISC SW
0X	FS - FR ROOF ACCESS. GRD	0Y	RR JCT BDY GRD	12Y	FR JCT 12V DISC SW	24C	FR JCT 24V DISC SW
0X	RS - LOG.CPT ACCESS. GRD	0Z	BAT CPT 24V F.B.S.	12Z	BAT CPT 12V DISC SW	24H	FR JCT 24V DISC SW
0X	RS - A/C JCT BDV GRD	0Y	ABS FR JCT BDY GRD STUD	12Z	FR JCT 12V DISC SW	24K	FR JCT 24V DISC SW
0Y	FS - A/C CPT BDV GRD	0Y2	FR JCT BDY CPT GRD STUD	12Z	FR JCT 12V DISC SW	24R	FR JCT 24V DISC SW
0Y4	RUB - BAT/EQUAL.-BAT GRD	0Z	FR JCT BDY 12V DISTRIBUTION	12Z	12V IGNITION DISTRIBUTION	24R	FR JCT 24V DISC SW-HOT WIRE
0Z	EC - STARTER MOTOR GRD	0Z	RR JCT BDY CPT GRD STUD	12Z	12V IGNITION DISTRIBUTION	24C	FR JCT 24V DISC SW
0Z	BAT.EQUALIZER GRD	0W	RR JCT BDY CPT GRD STUD	12Z	BAT CPT 24V DISC SW	24H	FR JCT 24V DISC SW
0Z	FS - SERVL CPT ACCESS. GRD	1	TACHO SYSTEM	12F	FR JCT BDY 12V CONTROL	24K	FR JCT 24V DISC SW HOT WIRE
0Z	RS - ENGINE ACCESS. GRD	2B	INVERTER CPT DIV DISC	12G	A/C & HEAT 12V DISC SW	24R	FR JCT 24V DISC SW
0Z	R3B - SPEED SW. BAT.T. GRD	2C	A/C & HEAT SYSTEM-LO PRESS SW	12H	INVERTER CPT 12V DISC SW	24QP	A/C JCT BDV 24V HOT WIRE
0CS	24V DISC. SW. RL/ GRD STUD	2D	A/C & HEAT SYSTEM-HI PRESS SW	12J	A/C & HEAT 12V DISC SW	24R	FR JCT 24V DISC SW
0CS	24V DISC. SW. RL/ GRD STUD	2H	HOKNEY BATTERY RADIO	12K	HOKNEY BATTERY RADIO	24E	FR JCT 24V DISC SW
0S	FS - SERVL CPT ACCESS. GRD	2L	SOUND SYSTEM 12V RADIO	12L	SOUND SYSTEM 12V RADIO	24E	FR JCT 24V DISC SW
0D	RS - HAT RACK ACCES.L.LH GRD	2M	SOUND SYSTEM 12V RADIO	12S2	SOUND SYSTEM 12V RADIO	24F	FR JCT 24V DISC SW
0DF	RS - RR SIDE FLASH & MARK GRD	4C	HOSTESS CHIME	12S2	SOUND SYSTEM 12V RADIO	24F	FR JCT 24V DISC SW
0E	FS - FR LAMPS GRD	4E	HOSTESS CHIME & EMERG.EXIT	12S8	SOUND SYSTEM 12V RADIO	24G	FR JCT 24V DISC SW
0E	RS - HAT RACK ACCES.L.LH GRD	5	UPPER WINDSHIELD DEFROSTER	12S	SOUND SYSTEM 12V RADIO	24G	FR JCT 24V DISC SW
0E	RS - HAT RACK ACCES.L.LH GRD	5A	UPPER WINDSHIELD DEFROSTER	12V	12V HOT WIRE DISTRIBUTION	24H	FR JCT 24V DISC SW
0EF	FRS - HEAD & COMPANIONWAY GRD	5H	INTERIOR LTS-EMERGENCY EXIT	12VF	BAT CPT 12V F.B.S.	24J	FR JCT 24V DISC SW
0EJ	RS - HAT RACK ACCES.-RR GRD	5N	INTERIOR LTS-AISLE	12W	INVERTER CPT 12V DISC SW	24K	FR JCT 24V DISC SW
0EJ	FS - INSTR. PANEL LH GRD	7A	SPEED SW 5 MPH N/O	12VE	12V IGNITION DISTRIBUTION	24LA	FR JRCT 24V 24V IGNITION
0EJ	FS - INSTR.PANEL CENT GRD	7B	ENTRANCE DOOR (SEDAN)	12VR	BAT CPT 12V DISC SW TO RJB	24L	FR JRCT 24V 24V IGNITION
0EM	FS - LAVATORY ACCESS. GRD	7C	ENTRANCE DOOR (SEDAN)	12W	12V BATTERY: DDEC ECU	24LB	FR JRCT 24V 24V IGNITION
0EN	FS - LAVATORY ACCESS. GRD	7D	ENTRANCE DOOR (SEDAN)	12X	FR JCT BDY 12V DISC SW	24LC	FR JRCT 24V 24V IGNITION
0EJ	FS - SW CONSOLE L.H GRD	7DA	FR JCT BDY 12V DISC SW	12Y	FR JCT BDY 12V DISC SW	24LD	FR JRCT 24V 24V IGNITION
0EJ	RS - RR ROOF ACCES. GRD	7DB	ENTRANCE DOOR (SEDAN)	12Y2	FR JCT BDY 12V DISC SW	24D	FR JCT 24V DISC SW
0EK	RS - RR ROOF ACCES. GRD	7E	TACHO SYSTEM SHIELD	12Z	FR JCT BDY 12V DISC SW	24E	FR JCT 24V DISC SW
0L	RS - ENGINE CPT ACCES. GRD	9	INTERIOR LTS-ENGINE CPT	13A	ALARM & SIGNAL-LO AIR PRDN.	24F	FR JCT 24V DISC SW
0L	FS - UNDER DASH RH GRD	9A	INTERIOR LTS-ENGINE CPT	13B	ALARM & SIGNAL-LO AIR	24G	FR JCT 24V DISC SW
0LA	ENTRANCE DOOR-(SEDAN) GRD	9E	ENGINE DOOR ALARM T.L.T.L	14	LAVATORY-FLUSHING PUMP	24H	FR JCT 24V DISC SW
0M	FS - ENGINE CPT ACCES. GRD	9F	INTERIOR LTS-FR SERVICE CPT	15	EXTERIOR LTS-MAIN TURN SIG.	24J	FR JCT 24V DISC SW
0M	RS - ENGINE CPT ACCES. GRD	9H	INTERIOR LTS-FR SERVICE CPT	15	EXTERIOR LTS-MAIL T.TUNE LEVEL	24K	24V DISC SW RL/ SIGNAL
0M	FS - UNDER DASH RH GRD	10	INTERIOR LTS-LUGGAGE CPT	15A	WIPER & WASHER UPPER WINDSHIELD	24SL	SOUND SYSTEM 24V AMPLIFIER
0MR	24V DISC. SW. RL/ GRD SIGNAL	10B	INTERIOR LTS-LUGGAGE CPT	16	SPEEDO - TRANSMITTER	24SL	SOUND SYSTEM 24V AMPLIFIER
0MS	24V DISC. SW. RL/ GRD STUD	10B	INTERIOR LTS-LUGGAGE CPT	16S	SPEEDO - TRANSMITTER	24S3	SOUND SYSTEM 24V VIDEO
0N	FS - UNDER DASH RH GRD	10C	INTERIOR LTS-LUGGAGE CPT	17	SPEEDO - TRANSMITTER	24S4	SOUND SYSTEM 24V VIDEO
0N	RS - ENGINE CPT ACCES. GRD	10E	INTERIOR LTS-LUGGAGE CPT	17	EXTERIOR LTS-FLASHER UNIT	24SB	SOUND SYSTEM 24V FEEDING
0N	RS - ENGINE CPT ACCES. GRD	10F	INTERIOR LTS-LUGGAGE CPT	18	DIFFERENTIAL OIL TEMP.	24SB	SOUND SYSTEM 24V FEEDING
0P	FS - ENGINE CPT ACCES. GRD	10G	INTERIOR LTS-LUGGAGE CPT	19	DIFFERENTIAL OIL TEMP.	24T	FR JRCT BDY 24V DISC SW
0P	FS - UNDER DASH LH GRD	10H	INTERIOR LTS-LUGGAGE DOOR AJAR	20	SPEEDO - NEGATIVE SIGN	24W2	FR JRCT BDY 24V DISC SW
0P	FS - ENGINE CPT ACCES. GRD	10T	INTERIOR LTS-LUGGAGE CPT	20T	SPEEDO - NEGATIVE SIGN	24W3	FR JRCT BDY 24V DISC SW
0RE	RADIO ACTIV. HEAD CHASSIS GRD	11A	FR DESTINATION SIGN	21	EXTERIOR LTS-DIRECTIONAL LH	24W4	FR JRCT BDY 24V DISC SW
0RE	RADIO ACTIV. HEAD CHASSIS GRD	11B	FR DESTINATION SIGN	21A	EXTERIOR LTS-DIRECTIONAL LH	24W5	FR JRCT BDY 24V DISC SW

CIRCUIT NUMBER CODE — Page E : 2

No.	SYSTEM	No.	SYSTEM	No.	SYSTEM	No.	SYSTEM
24V0	24V HOT WIRE DISTRIBUTION	45D	A/C & HEAT SYSTEM-WATER VALVE	7D	INTERIOR LTS-HAT RACK & RR RUN.	*5A	DDEC-FAST IDLE SISWA
24VF	BAT CPT 24V SW TO F.B & JC	45E	A/C & HEAT SYSTEM-HEAT 1 SIGN	7E	EXTERIOR LTS-DOCKING	*6W	PARK/BRAKE SW. SIGNL (WCL)
24VF	INVERTER CPT 24V DISC SW	45H	A/C & HEAT SYSTEM-DRIVER'S HTR	7G	DOCKING LTS & ENGINE CPT. LTS	*82	BATTERY EQUALIZER-CHECK BLANCE
24VH	BATTERY TO EQUALIZER 24V	45H	A/C & HEAT SYSTEM-DRIVER'S HTR	7H	EXTERIOR LTS-DOCKING	*83	BATTERY EQUALIZER-CHECK LO.HI
24VH	RR JCT BDV 24V IGNITION	45W	A/C & HEAT SYSTEM-DRIVER'S HTR	7J	EXTERIOR LTS-DOCKING	*95A	ENGINE BRAKE & RETARDER SYSTEM
24VR	BAT CPT 24V DISC SW TO RJB	46	EXTERIOR LTS-MARKER	7K	EXTERIOR LTS-DOCKING		THERMOSTATS
24VR	BAT CPT 24V DISC SW TO RJB	46A	EXTERIOR LTS-MARKER	7L	EXTERIOR LTS-DOCKING	1	INTERIOR LTS-GENERAL
24W2	BATT.CPT 12-HOLD-PUMP (WCL)	46B	EXTERIOR LTS-MARKER	7M	SUN VISOR-RH	10	INTERIOR LTS-GENERAL
24W4	24V BATTERY-HYDUPUMP (WCL)	46B	EXTERIOR LTS-MARKER	7N	SUN VISOR-RH	10DB	INTERIOR LTS-GENERAL
24V1	FR JCT BDV 24V DISC SW	46C	EXTERIOR LTS-MARKER	7QC	SUN VISOR-LH	10J	24V STARTER SOL. FEEDING
24V2	FR JCT BDV 24V DISC SW	47	A/C & HEAT SYSTEM-DRIVER'S HTR	7R	SUN VISOR-LH	10J	WORLD TRANSMI-LO SIGNAL SOL.-LO
24V2	FR JCT BDV 24V DISC SW	48	EXTERIOR LTS-MARKER	7S	LAVATORY-FEEDING	10J	24V ECU-STARTER SOLENOID
24V3	FR JCT BDV 24V DISC SW	48A	EXTERIOR DOOR (SEDAN)	7T	LAVATORY-FEEDING RH	10J	WORLD TRANSMI-SOL.-LO
25A	HOT 24V BATTERY-RADIO	48B	EXTERIOR DOOR (SEDAN)	7U	LAVATORY-FEEDING RH	10K	WORLD TRANSMI-SOL.-LO
25A	HOT 24V BATTERY-RADIO	48C	EXTERIOR DOOR (SEDAN)	7V	LAVATORY-FEEDING RH	10L	WORLD TRANSMI-SOL.-FORWARD
25B	EXTERIOR LTS-DAYTIME RUN.LTS	48D	EXTERIOR DOOR (SEDAN)	7W	LAVATORY-FEEDING RH	10M	WORLD TRANSMI-SOL.-REVERSE
26	DRIVER'S WINDOW LIFTER	7A	EXTERIOR LTS-DOCKING	7X	INTERIOR LTS-READING LH	10N	WORLD TRANSMI-RETARDER & SUMP
26	CIGAR LIGHTER	7AA	EXTERIOR DOOR (SEDAN)	7BA	INTERIOR LTS-READING LH	10P	WORLD TRANSMI-RETARDER
26F	DRIVER'S WINDOW LIFTER	7B	EXTERIOR LTS-DOCKING	7C	FUEL TANK GAUGE	10S	WORLD TRANSMI-RET.ACTUATOR SOL
26C	DRIVER'S WINDOW LIFTER	7C	EXTERIOR LTS-DOCKING	7D	LOW FUEL LT & ETHER COLD START	10T	WORLD TRANSMI-SOL.LEVEL SENSOR
26D	DRIVER'S WINDOW LIFTER	7D	EXTERIOR LTS-DOCKING	7E	FUEL PRIME PUMP	10U	WORLD TRANSMI-SOL.LEVEL SENSOR
26E	DRIVER'S WINDOW LIFTER	7E	EXTERIOR LTS-DOCKING	7F	FUEL PRIME PUMP	10V	WORLD TRANSMI-RET.-SOL.-LO
27A	A/C & HEAT SYSTEM-DRIVER'S HTR	7F	EXTERIOR LTS-DOCKING	7G	FUEL PRIME PUMP	10W	WORLD TRANSMI-RET.-SOL.-HI
27B	A/C & HEAT SYSTEM-DRIVER'S HTR	7G	EXTERIOR LTS-DOCKING	7H	A/C & HEAT SYSTEM-HI PRESSURE	10X	WORLD TRANSMI-12V IGNITION
27B	A/C & HEAT SYSTEM-DRIVER'S HTR	7H	EXTERIOR LTS-DOCKING	7J	A/C & HEAT SYSTEM-DRIVER'S HTR	10YB	FUEL WATER FILTER
30A	SUN VISOR-LH	7J	EXTERIOR LTS-DOCKING	7K	A/C & HEAT SYSTEM-DRIVER'S HTR	10YB	FUEL WATER FILTER
30A	A/C & HEAT SYSTEM-UNLOADER	7K	EXTERIOR LTS-DOCKING	7L	A/C & HEAT SYSTEM-COMPRESSOR	10YB	FUEL WATER FILTER
30B	A/C & HEAT SYSTEM-UNLOADER	7L	EXTERIOR LTS-DOCKING	7M	A/C & HEAT SYSTEM-COMPRESSOR	10YB	FUEL WATER FILTER
30C	A/C & HEAT SYSTEM-UNLOADER	7M	EXTERIOR LTS-DOCKING	7N	A/C & HEAT SYSTEM-COMPRESSOR	11	WORLD TRANSMI-REVERSE WARNING
30D	A/C & HEAT SYSTEM-UNLOADER	7N	EXTERIOR LTS-DOCKING	7P	A/C & HEAT SYSTEM-COMPRESSOR	11A	WORLD TRANSMI-SOL.-LO
30E	WIPER & WASHER SYSTEM	7P	EXTERIOR LTS-DOCKING	7R	EXTERIOR LTS-STOP SIGNAL	11B	INTERIOR LTS-DASH L.T.
30F	WIPER & WASHER SYSTEM	7R	EXTERIOR LTS-DOCKING	7S	EXTERIOR LTS-STOP SIGNAL	11C	INTERIOR LTS-DASH L.T. REGUL.
30E	WIPER & WASHER SYSTEM	7S	EXTERIOR LTS-DOCKING	7T	EXTERIOR LTS-STOP SIGNAL	11D	INTERIOR LTS-DASH L.T. REGUL.
30F	WIPER & WASHER SYSTEM	7T	EXTERIOR LTS-DOCKING	7U	EXTERIOR LTS-STOP SIGNAL	11E	INTERIOR LTS-DASH L.T. REGUL.
30G	WIPER & WASHER SYSTEM	7U	EXTERIOR LTS-DOCKING	7V	EXTERIOR LTS-STOP SIGNAL	11F	INTERIOR LTS-DASH L.T. REGUL.
30H	WIPER & WASHER SYSTEM	7V	EXTERIOR LTS-DOCKING	7W	EXTERIOR LTS-STOP SIGNAL	11G	INTERIOR LTS-DASH L.T. REGUL.
30J	WIPER & WASHER SYSTEM	7W	EXTERIOR LTS-DOCKING	7X	EXTERIOR LTS-STOP SIGNAL	11H	INTERIOR LTS-DASH L.T. REGUL.
30K	WIPER & WASHER SYSTEM	7X	EXTERIOR LTS-DOCKING	8A	ENGINE CTRL-SOL.-LO	11J	DDEC III-CODLANT LEVEL
30L	WIPER & WASHER SYSTEM	7Y	EXTERIOR LTS-DOCKING	8B	ENGINE CTRL-SOL.-HI	11K	DDEC III-CODLANT LEVEL
30M	WIPER & WASHER SYSTEM	7Z	EXTERIOR LTS-DOCKING	8BA	ENGINE CTRL-SOL.-HI	11L	DDEC III-CODLANT LEVEL
30N	WIPER & WASHER SYSTEM	8A	ENGINE CTRL-SOL.-LO	8BB	ENGINE CTRL-SOL.-HI	11M	DDEC III-CODLANT LEVEL
30P	WIPER & WASHER SYSTEM	8B	ENGINE CTRL-SOL.-HI	8C	ENGINE CTRL-SOL.-LO	11N	DDEC III-CODLANT LEVEL
30R	WIPER & WASHER SYSTEM	8C	ENGINE CTRL-SOL.-LO	8D	ENGINE CTRL-SOL.-LO	11P	DDEC III-CODLANT LEVEL
30S	WIPER & WASHER SYSTEM	8D	ENGINE CTRL-SOL.-LO	8E	ENGINE CTRL-SOL.-LO	11R	DDEC III-CODLANT LEVEL
30T	WIPER & WASHER SYSTEM	8E	ENGINE CTRL-SOL.-LO	8F	ENGINE CTRL-SOL.-LO	11S	DDEC III-CODLANT LEVEL
30U	WIPER & WASHER SYSTEM	8F	ENGINE CTRL-SOL.-LO	8G	ENGINE CTRL-SOL.-LO	11T	DDEC III-CODLANT LEVEL
30V	WIPER & WASHER SYSTEM	8G	ENGINE CTRL-SOL.-LO	8H	ENGINE CTRL-SOL.-LO	11U	DDEC III-CODLANT LEVEL
30W	WIPER & WASHER SYSTEM	8H	ENGINE CTRL-SOL.-LO	8J	ENGINE CTRL-SOL.-LO	11V	DDEC III-CODLANT LEVEL
30X	WIPER & WASHER SYSTEM	8J	ENGINE CTRL-SOL.-LO	8K	ENGINE CTRL-SOL.-LO	11W	DDEC III-CODLANT LEVEL
30Y	WIPER & WASHER SYSTEM	8K	ENGINE CTRL-SOL.-LO	8L	ENGINE CTRL-SOL.-LO	11X	DDEC III-CODLANT LEVEL
30Z	WIPER & WASHER SYSTEM	8L	ENGINE CTRL-SOL.-LO	8M	ENGINE CTRL-SOL.-LO	11Y	DDEC III-CODLANT LEVEL
31	ENGINE CTRL-SOL.-LO	8M	ENGINE CTRL-SOL.-LO	8N	ENGINE CTRL-SOL.-LO	11Z	DDEC III-CODLANT LEVEL
31A	ENGINE CTRL-SOL.-LO	8N	ENGINE CTRL-SOL.-LO	8P	ENGINE CTRL-SOL.-LO	11AA	DDEC III-CODLANT LEVEL
31B	ENGINE CTRL-SOL.-LO	8P	ENGINE CTRL-SOL.-LO	8R	ENGINE CTRL-SOL.-LO	11BA	DDEC III-CODLANT LEVEL
31C	ENGINE CTRL-SOL.-LO	8R	ENGINE CTRL-SOL.-LO	8S	ENGINE CTRL-SOL.-LO	11C	DDEC III-CODLANT LEVEL
31D	ENGINE CTRL-SOL.-LO	8S	ENGINE CTRL-SOL.-LO	8T	ENGINE CTRL-SOL.-LO	11D	DDEC III-CODLANT LEVEL
31E	ENGINE CTRL-SOL.-LO	8T	ENGINE CTRL-SOL.-LO	8U	ENGINE CTRL-SOL.-LO	11E	DDEC III-CODLANT LEVEL
31F	ENGINE CTRL-SOL.-LO	8U	ENGINE CTRL-SOL.-LO	8V	ENGINE CTRL-SOL.-LO	11F	DDEC III-CODLANT LEVEL
31G	ENGINE CTRL-SOL.-LO	8V	ENGINE CTRL-SOL.-LO	8W	ENGINE CTRL-SOL.-LO	11G	DDEC III-CODLANT LEVEL
31H	ENGINE CTRL-SOL.-LO	8W	ENGINE CTRL-SOL.-LO	8X	ENGINE CTRL-SOL.-LO	11H	DDEC III-CODLANT LEVEL
31J	ENGINE CTRL-SOL.-LO	8X	ENGINE CTRL-SOL.-LO	8Y	ENGINE CTRL-SOL.-LO	11J	DDEC III-CODLANT LEVEL
31K	ENGINE CTRL-SOL.-LO	8Y	ENGINE CTRL-SOL.-LO	8Z	ENGINE CTRL-SOL.-LO	11K	DDEC III-CODLANT LEVEL
31L	ENGINE CTRL-SOL.-LO	8Z	ENGINE CTRL-SOL.-LO	8AA	ENGINE CTRL-SOL.-LO	11L	DDEC III-CODLANT LEVEL
31M	ENGINE CTRL-SOL.-LO	8AA	ENGINE CTRL-SOL.-LO	8BA	ENGINE CTRL-SOL.-LO	11M	DDEC III-CODLANT LEVEL
31N	ENGINE CTRL-SOL.-LO	8BA	ENGINE CTRL-SOL.-LO	8C	ENGINE CTRL-SOL.-LO	11N	DDEC III-CODLANT LEVEL
31P	ENGINE CTRL-SOL.-LO	8C	ENGINE CTRL-SOL.-LO	8D	ENGINE CTRL-SOL.-LO	11P	DDEC III-CODLANT LEVEL
31R	ENGINE CTRL-SOL.-LO	8D	ENGINE CTRL-SOL.-LO	8E	ENGINE CTRL-SOL.-LO	11R	DDEC III-CODLANT LEVEL
31S	ENGINE CTRL-SOL.-LO	8E	ENGINE CTRL-SOL.-LO	8F	ENGINE CTRL-SOL.-LO	11S	DDEC III-CODLANT LEVEL
31T	ENGINE CTRL-SOL.-LO	8F	ENGINE CTRL-SOL.-LO	8G	ENGINE CTRL-SOL.-LO	11T	DDEC III-CODLANT LEVEL
31U	ENGINE CTRL-SOL.-LO	8G	ENGINE CTRL-SOL.-LO	8H	ENGINE CTRL-SOL.-LO	11U	DDEC III-CODLANT LEVEL
31V	ENGINE CTRL-SOL.-LO	8H	ENGINE CTRL-SOL.-LO	8J	ENGINE CTRL-SOL.-LO	11V	DDEC III-CODLANT LEVEL
31W	ENGINE CTRL-SOL.-LO	8J	ENGINE CTRL-SOL.-LO	8K	ENGINE CTRL-SOL.-LO	11W	DDEC III-CODLANT LEVEL
31X	ENGINE CTRL-SOL.-LO	8K	ENGINE CTRL-SOL.-LO	8L	ENGINE CTRL-SOL.-LO	11X	DDEC III-CODLANT LEVEL
31Y	ENGINE CTRL-SOL.-LO	8L	ENGINE CTRL-SOL.-LO	8M	ENGINE CTRL-SOL.-LO	11Y	DDEC III-CODLANT LEVEL
31Z	ENGINE CTRL-SOL.-LO	8M	ENGINE CTRL-SOL.-LO	8N	ENGINE CTRL-SOL.-LO	11Z	DDEC III-CODLANT LEVEL
31AA	ENGINE CTRL-SOL.-LO	8N	ENGINE CTRL-SOL.-LO	8P	ENGINE CTRL-SOL.-LO	11AA	DDEC III-CODLANT LEVEL
31BA	ENGINE CTRL-SOL.-LO	8P	ENGINE CTRL-SOL.-LO	8R	ENGINE CTRL-SOL.-LO	11BA	DDEC III-CODLANT LEVEL
31C	ENGINE CTRL-SOL.-LO	8R	ENGINE CTRL-SOL.-LO	8S	ENGINE CTRL-SOL.-LO	11C	DDEC III-CODLANT LEVEL
31D	ENGINE CTRL-SOL.-LO	8S	ENGINE CTRL-SOL.-LO	8T	ENGINE CTRL-SOL.-LO	11D	DDEC III-CODLANT LEVEL
31E	ENGINE CTRL-SOL.-LO	8T	ENGINE CTRL-SOL.-LO	8U	ENGINE CTRL-SOL.-LO	11E	DDEC III-CODLANT LEVEL
31F	ENGINE CTRL-SOL.-LO	8U	ENGINE CTRL-SOL.-LO	8V	ENGINE CTRL-SOL.-LO	11F	DDEC III-CODLANT LEVEL
31G	ENGINE CTRL-SOL.-LO	8V	ENGINE CTRL-SOL.-LO	8W	ENGINE CTRL-SOL.-LO	11G	DDEC III-CODLANT LEVEL
31H	ENGINE CTRL-SOL.-LO	8W	ENGINE CTRL-SOL.-LO	8X	ENGINE CTRL-SOL.-LO	11H	DDEC III-CODLANT LEVEL
31J	ENGINE CTRL-SOL.-LO	8X	ENGINE CTRL-SOL.-LO	8Y	ENGINE CTRL-SOL.-LO	11J	DDEC III-CODLANT LEVEL
31K	ENGINE CTRL-SOL.-LO	8Y	ENGINE CTRL-SOL.-LO	8Z	ENGINE CTRL-SOL.-LO	11K	DDEC III-CODLANT LEVEL
31L	ENGINE CTRL-SOL.-LO	8Z	ENGINE CTRL-SOL.-LO	8AA	ENGINE CTRL-SOL.-LO	11L	DDEC III-CODLANT LEVEL
31M	ENGINE CTRL-SOL.-LO	8AA	ENGINE CTRL-SOL.-LO	8BA	ENGINE CTRL-SOL.-LO	11M	DDEC III-CODLANT LEVEL
31N	ENGINE CTRL-SOL.-LO	8BA	ENGINE CTRL-SOL.-LO	8C	ENGINE CTRL-SOL.-LO	11N	DDEC III-CODLANT LEVEL
31P	ENGINE CTRL-SOL.-LO	8C	ENGINE CTRL-SOL.-LO	8D	ENGINE CTRL-SOL.-LO	11P	DDEC III-CODLANT LEVEL
31R	ENGINE CTRL-SOL.-LO	8D	ENGINE CTRL-SOL.-LO	8E	ENGINE CTRL-SOL.-LO	11R	DDEC III-CODLANT LEVEL
31S	ENGINE CTRL-SOL.-LO	8E	ENGINE CTRL-SOL.-LO	8F	ENGINE CTRL-SOL.-LO	11S	DDEC III-CODLANT LEVEL
31T	ENGINE CTRL-SOL.-LO	8F	ENGINE CTRL-SOL.-LO	8G	ENGINE CTRL-SOL.-LO	11T	DDEC III-CODLANT LEVEL
31U	ENGINE CTRL-SOL.-LO	8G	ENGINE CTRL-SOL.-LO	8H	ENGINE CTRL-SOL.-LO	11U	DDEC III-CODLANT LEVEL
31V	ENGINE CTRL-SOL.-LO	8H	ENGINE CTRL-SOL.-LO	8J	ENGINE CTRL-SOL.-LO	11V	DDEC III-CODLANT LEVEL
31W	ENGINE CTRL-SOL.-LO	8J	ENGINE CTRL-SOL.-LO	8K	ENGINE CTRL-SOL.-LO	11W	DDEC III-CODLANT LEVEL
31X	ENGINE CTRL-SOL.-LO	8K	ENGINE CTRL-SOL.-LO	8L	ENGINE CTRL-SOL.-LO	11X	DDEC III-CODLANT LEVEL
31Y	ENGINE CTRL-SOL.-LO	8L	ENGINE CTRL-SOL.-LO	8M	ENGINE CTRL-SOL.-LO	11Y	DDEC III-CODLANT LEVEL
31Z	ENGINE CTRL-SOL.-LO	8M	ENGINE CTRL-SOL.-LO	8N	ENGINE CTRL-SOL.-LO	11Z	DDEC III-CODLANT LEVEL
31AA	ENGINE CTRL-SOL.-LO	8N	ENGINE CTRL-SOL.-LO	8P	ENGINE CTRL-SOL.-LO	11AA	DDEC III-CODLANT LEVEL
31BA	ENGINE CTRL-SOL.-LO	8P	ENGINE CTRL-SOL.-LO	8R	ENGINE CTRL-SOL.-LO	11BA	DDEC III-CODLANT LEVEL
31C	ENGINE CTRL-SOL.-LO	8R	ENGINE CTRL-SOL.-LO	8S	ENGINE CTRL-SOL.-LO	11C	DDEC III-CODLANT LEVEL
31D	ENGINE CTRL-SOL.-LO	8S	ENGINE CTRL-SOL.-LO	8T	ENGINE CTRL-SOL.-LO	11D	DDEC III-CODLANT LEVEL
31E	ENGINE CTRL-SOL.-LO	8T	ENGINE CTRL-SOL.-LO	8U	ENGINE CTRL-SOL.-LO	11E	DDEC III-CODLANT LEVEL
31F	ENGINE CTRL-SOL.-LO	8U	ENGINE CTRL-SOL.-LO	8V	ENGINE CTRL-SOL.-LO	11F	DDEC III-CODLANT LEVEL
31G	ENGINE CTRL-SOL.-LO	8V	ENGINE CTRL-SOL.-LO	8W	ENGINE CTRL-SOL.-LO	11G	DDEC III-CODLANT LEVEL
31H	ENGINE CTRL-SOL.-LO	8W	ENGINE CTRL-SOL.-LO	8X	ENGINE CTRL-SOL.-LO	11H	DDEC III-CODLANT LEVEL
31J	ENGINE CTRL-SOL.-LO	8X	ENGINE CTRL-SOL.-LO	8Y	ENGINE CTRL-SOL.-LO	11J	DDEC III-CODLANT LEVEL
31K	ENGINE CTRL-SOL.-LO	8Y	ENGINE CTRL-SOL.-LO	8Z	ENGINE CTRL-SOL.-LO	11K	DDEC III-CODLANT LEVEL
31L	ENGINE CTRL-SOL.-LO	8Z	ENGINE CTRL-SOL.-LO	8AA	ENGINE CTRL-SOL.-LO	11L	DDEC III-CODLANT LEVEL
31M	ENGINE CTRL-SOL.-LO	8AA	ENGINE CTRL-SOL.-LO	8BA	ENGINE CTRL-SOL.-LO	11M	DDEC III-CODLANT LEVEL
31N	ENGINE CTRL-SOL.-LO	8BA	ENGINE CTRL-SOL.-LO	8C	ENGINE CTRL-SOL.-LO	11N	DDEC III-CODLANT LEVEL
31P	ENGINE CTRL-SOL.-LO	8C	ENGINE CTRL-SOL.-LO	8D	ENGINE CTRL-SOL.-LO	11P	DDEC III-CODLANT LEVEL
31R	ENGINE CTRL-SOL.-LO	8D	ENGINE CTRL-SOL.-LO	8E	ENGINE CTRL-SOL.-LO	11R	DDEC III-CODLANT LEVEL
31S	ENGINE CTRL-SOL.-LO	8E	ENGINE CTRL-SOL.-

PLOTTAGE SCALE = 3.18:1

CIRCUIT BREAKER CODE (CB) Page F : 1

NO.	PAGE	AMPERE	#PREVOST	LOCATION	FUNCTION
CB1	2	40A	560703	BAT CPT	12V IGNITION
CB2	1	30A	870690	BAT CPT	12V HOT WIRE
CB3	1	40A	560703	BAT CPT	12V FEED RR JCT BOX
CB4	1	40A	560703	BAT CPT	12V FEED FR JCT BOX
CB5	1	30A	870690	BAT CPT	24V HOT WIRE
CB6	1	90A	560298	BAT CPT	24V FEED RJ B & STARTER RLY
CB7	1	90A	560298	BAT CPT	24V FEED FJB & INVERTER CPT
CB8	1	150A	560299	BAT CPT	A/C JCT BOX & EVAP. FAN
CB9	1	150A	560299	BAT CPT	CONDENSER FAN MOTOR
CB10	4	8A	561791	FR JCT BOX	MASTER SWITCH
CB11	30	8A	561791	GALLEY	RH HEATING CONTAINER
CB12	30	8A	561791	GALLEY	LH HEATING CONTAINER
CB13	30	6A	561790	GALLEY	REFRIGERATOR
CB14	33	15A	561793	RR JCT BOX	PRE-HEAT WATER HEATER (WEBASTO)
CB15	33	15A	561793	RR JCT BOX	PRE-HEAT WATER HEATER
CB16	4	8A	561791	RR JCT BOX	ENGINE-RR CTR & START SW
CB18	4	8A	561791	RR JCT BOX	ENGINE-FR CTR SW
CB19	5	15A	561793	BAT CPT	E.C.M. DDEC III
CB20	5	15A	561793	BAT CPT	E.C.M. DDEC III
CB21	5	6A	561790	BAT CPT	12V IGNITION DDEC III
CB22	1	40A	560703	BAT CPT	INVERTER VEDEO SYSTEM
CB24	6	20A	561794	BAT CPT	V.I.M. WORLD TRANSMISSION
CB26	11	10A	561792	RR JCT BOX	BACK-UP LTS
CB27	7	8A	561791	FR JCT BOX	24V IGN DASH ACCESSORIES
CB28	7	6A	561790	FR JCT BOX	12V IGN. VOLTMETER & SPEEDO-TACHO
CB29	7	20A	561794	FR JCT BOX	ELECTRICAL HORNS
CB30	7	6A	561790	FR JCT BOX	FIRE ALARM
CB31	8	8A	561791	RR JCT BOX	AIR DRYER
CB32	8	6A	561790	FR JCT BOX	ETHER COLD START & CRUISE DECEL
CB33	8	6A	561790	FR JCT BOX	PARKING BRAKE SW
CB34	11	10A	561792	RR JCT BOX	BACK-UP ALARM
CB35	11	6A	561790	FR JCT BOX	FOG & HAZARD SW
CB36	11	15A	561793	FR JCT BOX	FOG LTS
CB37	9	6A	561790	FR JCT BOX	HEAD & MULTI-FUNC. SW
CB38	9	10A	561792	FR JCT BOX	FR MARKER LTS
CB39	9	20A	561794	FR JCT BOX	CLEARANCE & IDENT. LTS
CB40	9	8A	561791	FR JCT BOX	FR CLEARANCE & IDENT. LTS
CB41	9	8A	561791	RR JCT BOX	RR CLEARANCE & IDENT. LTS
CB42	9	8A	561791	RR JCT BOX	RR MARKER,TAIL,LICENCE LTS
CB43	9	20A	561794	FR JCT BOX	HEADLAMP (HI)
CB44	9	15A	561793	FR JCT BOX	HEADLAMP (LO)
CB45	10	10A	561792	FR JCT BOX	MULTI-FUNC. SW (WIPER CTR)
CB46	10	20A	561794	FR JCT BOX	FLASHER & HAZARD UNIT
CB47	10	10A	561792	FR JCT BOX	CORNERING LTS
CB48	11	6A	561790	FR JCT BOX	STOP SW
CB49	11	15A	561793	RR JCT BOX	STOP & CYCLOP LTS
CB50	14	6A	561790	RR JCT BOX	HAT RACK COMPT. LTS
CB51	12	10A	561792	FR JCT BOX	UP WINDSH. WIPER & WASHER
CB52	13	15A	561793	RR JCT BOX	LUGGAGE LTS & DOOR AJAR LTS
CB53	13	6A	561790	RR JCT BOX	ENGINE COMPT. LTS
CB54	13	6A	561790	RR JCT BOX	FR SERVICE COMPT. LTS
CB55	14	8A	561791	RR JCT BOX	AILSE LTS
CB56	14	6A	561790	RR JCT BOX	EMERGENCY EXIT LTS
CB57	14	8A	561791	FR JCT BOX	DASH LTS RHEOSTAT
CB59	15	8A	561791	FR JCT BOX	DRIVER'S, READING & GENERAL - LTS
CB60	15	15A	561793	RR JCT BOX	READING LTS RH
CB61	15	15A	561793	RR JCT BOX	READING LTS LH
CB62	15	10A	561792	RR JCT BOX	GENERAL LTS
CB63	16	6A	561790	ALARM JCT BOX	110V FLUORESCENT LH

CIRCUIT BREAKER CODE (CB) Page F : 1

NO.	PAGE	AMPERE	#PREVOST	LOCATION	FUNCTION
CB64	16	6A	561790	ALARM JCT BOX	110V FLUORESCENT RH
CB65	16	10A	561792	RR JCT BOX	24V FLUORESCENT RH
CB66	16	10A	561792	RR JCT BOX	24V FLUORESCENT LH
CB67	17	6A	561790	FR JCT BOX	HOSTESS & PASSENGER CHIME
CB69	16	6A	561790	ALARM JCT BOX	GALLEY 110V REFRIGERATOR
CB70	18	6A	561790	FR JCT BOX	A/C & HEAT SW
CB71	18	10A	561792	A/C JCT BOX	A/C LOGIC PANEL
CB72	18	6A	561790	A/C JCT BOX	A/C COMPRESSOR CLUTCH
CB73	18	15A	561793	A/C JCT BOX	WATER PUMP
CB75	30	30A	870690	INVERTER COMPT	HEATING CONTAINERS
CB76	30	30A	870690	INVERTER COMPT	COFFEE MAKER
CB77	19	40A	560703	A/C JCT BOX	CONDENSER FAN MOTOR RH
CB78	19	40A	560703	A/C JCT BOX	CONDENSER FAN MOTOR LH
CB79	19	10A	561792	FR JCT BOX	DRIVER'S HTR FAN
CB80	31	8A	561791	FR JCT BOX	MIRROR-ADJUST & HEATED SW
CB81	20	15A	561793	FR JCT BOX	DRIVER'S WINDOW-LIFT & LIGHTER
CB82	28	10A	561792	FR JCT BOX	UPPER WINDSHIELD DEFROST
CB83	21	6A	561790	FR JCT BOX	TACHOGRAPH & WATER HEATER TIMER
CB84	20	3A	561792	FR JCT BOX	SUN VISOR
CB85	22	6A	561790	FR JCT BOX	ENTRANCE DOOR (SEDAN) & STEP LTS
CB86	23	8A	561791	RR JCT BOX	LAVATORY PUMP
CB88	23	6A	561790	RR JCT BOX	LAVATORY LTS
CB89	23	3A	561797	RR JCT BOX	LAVATORY FLUORESCENT
CB90	23	6A	561790	FR JCT BOX	FR DESTINATION SIGN
CB91	24	6A	561790	FR JCT BOX	DIGITAL THERMOMETER
CB92	24	6A	561790	FR JCT BOX	KNEELING SYSTEM
CB102	26	15A	561793	FR JCT BOX	SOUND SYSTEM
CB103	26	15A	561793	FR JCT BOX	SOUND SYSTEM
CB105	27	6A	561790	FR JCT BOX	E.C.U. ABS
CB106	27	10A	561792	FR JCT BOX	E.C.U. ABS
CB107	27	10A	561792	FR JCT BOX	E.C.U. ABS
CB109	23	8A	561791	RR JCT BOX	LAVATORY FAN & NIGHT LT
CB110	25	3A	561797	FR JCT BOX	LUGGAGE DOOR LOCK
CB113	11	10A	561792	RR JCT BOX	DOCKING LTS
CB121	28	20A	561794	FR JCT BOX	HEATING WINDSHEILD LH
CB122	28	20A	561794	FR JCT BOX	HEATING WINDSHEILD RH
CB124	8	6A	561790	RR JCT BOX	RADIATOR FAN CLUTCH
CB125	32	8A	561791	RR JCT BOX	POWER SYSTEM (WCL)
CB126	32	150A	560299	BAT CPT	HYD. MOTOR PUMP (WCL)

PLOTTAGE SCALE = 3.18:1

CIRCUIT BREAKER CODE (CB) Page F : 1

NO.	PAGE	AMPERE	#PREVOST	LOCATION	FUNCTION
CB1	2	40A	560703	BAT CPT	12V IGNITION
CB2	1	30A	870690	BAT CPT	12V HOT WIRE
CB3	1	40A	560703	BAT CPT	12V FEED RR JCT BOX
CB4	1	40A	560703	BAT CPT	12V FEED FR JCT BOX
CB5	1	30A	870690	BAT CPT	24V HOT WIRE
CB6	1	90A	560298	BAT CPT	24V FEED RJ B & STARTER RLY
CB7	1	90A	560298	BAT CPT	24V FEED FJB & INVERTER CPT
CB8	1	150A	560299	BAT CPT	A/C JCT BOX & EVAP. FAN
CB9	1	150A	560299	BAT CPT	CONDENSER FAN MOTOR
CB10	4	8A	561791	FR JCT BOX	MASTER SWITCH
CB11	30	8A	561791	GALLEY	RH HEATING CONTAINER
CB12	30	8A	561791	GALLEY	LH HEATING CONTAINER
CB13	30	6A	561790	GALLEY	REFRIGERATOR
CB14	33	15A	561793	RR JCT BOX	PRE-HEAT WATER HEATER (WEBASTO)
CB15	33	15A	561793	RR JCT BOX	PRE-HEAT WATER HEATER
CB16	4	8A	561791	RR JCT BOX	ENGINE-RR CTR & START SW
CB18	4	6A	561791	RR JCT BOX	ENGINE-FR CTR SW
CB19	5	15A	561793	BAT CPT	E.C.M. DDEC III
CB20	5	15A	561793	BAT CPT	E.C.M. DDEC III
CB21	5	6A	561790	BAT CPT	12V IGNITION DDEC III
CB22	1	40A	560703	BAT CPT	INVERTER VEDEO SYSTEM
CB24	6	20A	561794	BAT CPT	V.I.M. WORLD TRANSMISSION
CB26	11	10A	561792	RR JCT BOX	BACK-UP LTS
CB27	7	8A	561791	FR JCT BOX	24V IGN DASH ACCESSORIES
CB28	7	6A	561790	FR JCT BOX	12V IGN. VOLTMETER & SPEEDO-TACHO
CB29	7	20A	561794	FR JCT BOX	ELECTRICAL HORNS
CB30	7	6A	561790	FR JCT BOX	FIRE ALARM
CB31	8	8A	561791	RR JCT BOX	AIR DRYER
CB32	8	6A	561790	FR JCT BOX	ETHER COLD START & CRUISE DECEL
CB33	8	6A	561790	FR JCT BOX	PARKING BRAKE SW
CB34	11	10A	561792	RR JCT BOX	BACK-UP ALARM
CB35	11	6A	561790	FR JCT BOX	FOG & HAZARD SW
CB36	11	15A	561793	FR JCT BOX	FOG LTS
CB37	9	6A	561790	FR JCT BOX	HEAD & MULTI-FUNC. SW
CB38	9	10A	561792	FR JCT BOX	FR MARKER LTS
CB39	9	20A	561794	FR JCT BOX	CLEARANCE & IDENT. LTS
CB40	9	8A	561791	FR JCT BOX	FR CLEARANCE & IDENT. LTS
CB41	9	8A	561791	RR JCT BOX	RR CLEARANCE & IDENT. LTS
CB42	9	8A	561791	RR JCT BOX	RR MARKER,TAIL,LICENCE LTS
CB43	9	20A	561794	FR JCT BOX	HEADLAMP (HI)
CB44	9	15A	561793	FR JCT BOX	HEADLAMP (LO)
CB45	10	10A	561792	FR JCT BOX	MULTI-FUNC. SW (WIPER CTR)
CB46	10	20A	561794	FR JCT BOX	FLASHER & HAZARD UNIT
CB47	10	10A	561792	FR JCT BOX	CORNERING LTS
CB48	11	6A	561790	FR JCT BOX	STOP SW
CB49	11	15A	561793	RR JCT BOX	STOP & CYCLOP LTS
CB50	14	6A	561790	RR JCT BOX	HAT RACK COMPT. LTS
CB51	12	10A	561792	FR JCT BOX	UP WINDSH. WIPER & WASHER
CB52	13	15A	561793	RR JCT BOX	LUGGAGE LTS & DOOR AJAR LTS
CB53	13	6A	561790	RR JCT BOX	ENGINE COMPT. LTS
CB54	13	6A	561790	RR JCT BOX	FR SERVICE COMPT. LTS
CB55	14	8A	561791	RR JCT BOX	AILSE LTS
CB56	14	6A	561790	RR JCT BOX	EMERGENCY EXIT LTS
CB57	14	8A	561791	FR JCT BOX	DASH LTS RHEOSTAT
CB59	15	8A	561791	FR JCT BOX	DRIVER'S, READING & GENERAL - LTS
CB60	15	15A	561793	RR JCT BOX	READING LTS RH
CB61	15	15A	561793	RR JCT BOX	READING LTS LH
CB62	15	10A	561792	RR JCT BOX	GENERAL LTS
CB63	16	6A	561790	ALARM JCT BOX	110V FLUORESCENT LH

CIRCUIT BREAKER CODE (CB) Page F : 1

NO.	PAGE	AMPERE	#PREVOST	LOCATION	FUNCTION
CB64	16	6A	561790	ALARM JCT BOX	110V FLUORESCENT RH
CB65	16	10A	561792	RR JCT BOX	24V FLUORESCENT RH
CB66	16	10A	561792	RR JCT BOX	24V FLUORESCENT LH
CB67	17	6A	561790	FR JCT BOX	HOSTESS & PASSENGER CHIME
CB69	16	6A	561790	ALARM JCT BOX	GALLEY 110V REFRIGERATOR
CB70	18	6A	561790	FR JCT BOX	A/C & HEAT SW
CB71	18	10A	561792	A/C JCT BOX	A/C LOGIC PANEL
CB72	18	6A	561790	A/C JCT BOX	A/C COMPRESSOR CLUTCH
CB73	18	15A	561793	A/C JCT BOX	WATER PUMP
CB75	30	30A	870690	INVERTER COMPT	HEATING CONTAINERS
CB76	30	30A	870690	INVERTER COMPT	COFFEE MAKER
CB77	19	40A	560703	A/C JCT BOX	CONDENSER FAN MOTOR RH
CB78	19	40A	560703	A/C JCT BOX	CONDENSER FAN MOTOR LH
CB79	19	10A	561792	FR JCT BOX	DRIVER'S HTR FAN
CB80	31	8A	561791	FR JCT BOX	MIRROR-ADJUST & HEATED SW
CB81	20	15A	561793	FR JCT BOX	DRIVER'S WINDOW-LIFT & LIGHTER
CB82	28	10A	561792	FR JCT BOX	UPPER WINDSHIELD DEFROST
CB83	21	6A	561790	FR JCT BOX	TACHOGRAPH & WATER HEATER TIMER
CB84	20	3A	561792	FR JCT BOX	SUN VISOR
CB85	22	6A	561790	FR JCT BOX	ENTRANCE DOOR (SEDAN) & STEP LTS
CB86	23	8A	561791	RR JCT BOX	LAVATORY PUMP
CB88	23	6A	561790	RR JCT BOX	LAVATORY LTS
CB89	23	3A	561797	RR JCT BOX	LAVATORY FLUORESCENT
CB90	23	6A	561790	FR JCT BOX	FR DESTINATION SIGN
CB91	24	6A	561790	FR JCT BOX	DIGITAL THERMOMETER
CB92	24	6A	561790	FR JCT BOX	KNEELING SYSTEM
CB102	26	15A	561793	FR JCT BOX	SOUND SYSTEM
CB103	26	15A	561793	FR JCT BOX	SOUND SYSTEM
CB105	27	6A	561790	FR JCT BOX	E.C.U. ABS
CB106	27	10A	561792	FR JCT BOX	E.C.U. ABS
CB107	27	10A	561792	FR JCT BOX	E.C.U. ABS
CB109	23	8A	561791	RR JCT BOX	LAVATORY FAN & NIGHT LT
CB110	25	3A	561797	FR JCT BOX	LUGGAGE DOOR LOCK
CB113	11	10A	561792	RR JCT BOX	DOCKING LTS
CB121	28	20A	561794	FR JCT BOX	HEATING WINDSHEILD LH
CB122	28	20A	561794	FR JCT BOX	HEATING WINDSHEILD RH
CB124	8	6A	561790	RR JCT BOX	RADIATOR FAN CLUTCH
CB125	32,35	8A	561791	RR JCT BOX	POWER SYSTEM (WCL)
CB126	32	150A	560299	BAT CPT	HYD. MOTOR PUMP (WCL ST & ST)
CB126	35	90A	560298	BAT CPT	HYD. M OTOR PUMP (WCL RICON 9)

CIRCUIT BREAKER CODE (CB) Page F : 1

NO.	PAGE	AMPERE	#PREVOST	LOCATION	FUNCTION
CB1	2	40A	560703	BAT CPT	12V IGNITION
CB2	1	30A	870690	BAT CPT	12V HOT WIRE
CB3	1	40A	560703	BAT CPT	12V FEED RR JCT BOX
CB4	1	40A	560703	BAT CPT	12V FEED FR JCT BOX
CB5	1	30A	870690	BAT CPT	24V HOT WIRE
CB6	1	90A	560298	BAT CPT	24V FEED RJ B & STARTER RLY
CB7	1	90A	560298	BAT CPT	24V FEED FJB & INVERTER CPT
CB8	1	150A	560299	BAT CPT	A/C JCT BOX & EVAP. FAN
CB9	1	150A	560299	BAT CPT	CONDENSER FAN MOTOR
CB10	4	8A	561791	FR JCT BOX	MASTER SWITCH
CB11	30	8A	561791	GALLEY	RH HEATING CONTAINER
CB12	30	8A	561791	GALLEY	LH HEATING CONTAINER
CB13	30	6A	561790	GALLEY	REFRIGERATOR
CB14	33	15A	561793	RR JCT BOX	PRE-HEAT WATER HEATER (WEBASTO)
CB15	33	15A	561793	RR JCT BOX	PRE-HEAT WATER HEATER
CB16	4	8A	561791	RR JCT BOX	ENGINE-RR CTR & START SW
CB18	4	6A	561791	RR JCT BOX	ENGINE-FR CTR SW
CB19	5	15A	561793	BAT CPT	E.C.M. DDEC III
CB20	5	15A	561793	BAT CPT	E.C.M. DDEC III
CB21	5	6A	561790	BAT CPT	12V IGNITION DDEC III
CB24	6	20A	561794	BAT CPT	V.I.M. WORLD TRANSMISSION
CB26	11	10A	561792	RR JCT BOX	BACK-UP LTS
CB27	7	8A	561791	FR JCT BOX	24V IGN DASH ACCESSORIES
CB28	7	6A	561790	FR JCT BOX	12V IGN. VOLTMETER & SPEEDO-TACHO
CB29	7	20A	561794	FR JCT BOX	ELECTRICAL HORNS
CB30	7	6A	561790	FR JCT BOX	FIRE ALARM
CB31	8	8A	561791	RR JCT BOX	AIR DRYER
CB32	8	6A	561790	FR JCT BOX	ETHER COLD START & CRUISE DECEL
CB33	8	6A	561790	FR JCT BOX	PARKING BRAKE SW
CB34	11	10A	561792	RR JCT BOX	BACK-UP ALARM
CB35	11	6A	561790	FR JCT BOX	FOG & HAZARD SW
CB36	11	15A	561793	FR JCT BOX	FOG LTS
CB37	9	6A	561790	FR JCT BOX	HEAD & MULTI-FUNC. SW
CB38	9	10A	561792	FR JCT BOX	FR MARKER LTS
CB39	9	20A	561794	FR JCT BOX	CLEARANCE & IDENT. LTS
CB40	9	8A	561791	FR JCT BOX	FR CLEARANCE & IDENT. LTS
CB41	9	8A	561791	RR JCT BOX	RR CLEARANCE & IDENT. LTS
CB42	9	8A	561791	RR JCT BOX	RR MARKER,TAIL,LICENCE LTS
CB43	9	20A	561794	FR JCT BOX	HEADLAMP (HI)
CB44	9	15A	561793	FR JCT BOX	HEADLAMP (LO)
CB45	10	10A	561792	FR JCT BOX	MULTI-FUNC. SW (WIPER CTR)
CB46	10	20A	561794	FR JCT BOX	FLASHER & HAZARD UNIT
CB47	10	10A	561792	FR JCT BOX	CORNERING LTS
CB48	11	6A	561790	FR JCT BOX	STOP SW
CB49	11	15A	561793	RR JCT BOX	STOP & CYCLOP LTS
CB50	14	6A	561790	RR JCT BOX	HAT RACK COMPT. LTS
CB51	12	10A	561792	FR JCT BOX	UP WINDSH. WIPER & WASHER
CB52	13	15A	561793	RR JCT BOX	LUGGAGE LTS & DOOR AJAR LTS
CB53	13	6A	561790	RR JCT BOX	ENGINE COMPT. LTS
CB54	13	6A	561790	RR JCT BOX	FR SERVICE COMPT. LTS
CB55	14	8A	561791	RR JCT BOX	AILSE LTS
CB56	14	6A	561790	RR JCT BOX	EMERGENCY EXIT LTS
CB57	14	8A	561791	FR JCT BOX	DASH LTS RHEOSTAT
CB59	15	8A	561791	FR JCT BOX	DRIVER'S, READING & GENERAL - LTS
CB60	15	15A	561793	RR JCT BOX	READING LTS RH
CB61	15	15A	561793	RR JCT BOX	READING LTS LH
CB62	15	10A	561792	RR JCT BOX	GENERAL LTS
CB63	16	6A	561790	ALARM JCT BOX	110V FLUORESCENT LH
CB64	16	6A	561790	ALARM JCT BOX	110V FLUORESCENT RH

CIRCUIT BREAKER CODE (CB) Page F : 1

NO.	PAGE	AMPERE	#PREVOST	LOCATION	FUNCTION
CB65	16	10A	561792	RR JCT BOX	24V FLUORESCENT RH
CB66	16	10A	561792	RR JCT BOX	24V FLUORESCENT LH
CB67	17	6A	561790	FR JCT BOX	HOSTESS & PASSENGER CHIME
CB69	16	6A	561790	ALARM JCT BOX	GALLEY 110V REFRIGERATOR
CB70	18	6A	561790	FR JCT BOX	A/C & HEAT SW
CB71	18	10A	561792	A/C JCT BOX	A/C LOGIC PANEL
CB72	18	6A	561790	A/C JCT BOX	A/C COMPRESSOR CLUTCH
CB73	18	15A	561793	A/C JCT BOX	WATER PUMP
CB75	30	30A	870690	INVERTER COMPT	HEATING CONTAINERS
CB76	30	30A	870690	INVERTER COMPT	COFFEE MAKER
CB77	19	40A	560703	A/C JCT BOX	CONDENSER FAN MOTOR RH
CB78	19	40A	560703	A/C JCT BOX	CONDENSER FAN MOTOR LH
CB79	19	10A	561792	FR JCT BOX	DRIVER'S HTR FAN
CB80	31	8A	561791	FR JCT BOX	MIRROR-ADJUST & HEATED SW
CB81	20	15A	561793	FR JCT BOX	DRIVER'S WINDOW-LIFT & LIGHTER
CB82	28	10A	561792	FR JCT BOX	UPPER WINDSHIELD DEFROST
CB83	21	6A	561790	FR JCT BOX	TACHOGRAPH & WATER HEATER TIMER
CB84	20	3A	561792	FR JCT BOX	SUN VISOR
CB85	22	6A	561790	FR JCT BOX	ENTRANCE DOOR (SEDAN) & STEP LTS
CB86	23	8A	561791	RR JCT BOX	LAVATORY PUMP
CB88	23	6A	561790	RR JCT BOX	LAVATORY LTS
CB89	23	3A	561797	RR JCT BOX	LAVATORY FLUORESCENT
CB90	23	6A	561790	FR JCT BOX	FR DESTINATION SIGN
CB91	24	6A	561790	FR JCT BOX	DIGITAL THERMOMETER
CB92	24	6A	561790	FR JCT BOX	KNEELING SYSTEM
CB93	1	30A	870690	BAT CPT	SOUND SYSTEM 12V FEEDING
CB94	1	30A	870690	BAT CPT	SOUND SYSTEM 24V FEEDING
CB95	26	10A	561792	S.S.JCT PANEL	BACK-UP P.A. REI
CB96	26	10A	561792	S.S.JCT PANEL	CONTROL HEAD REI
CB97	26	10A	561792	S.S.JCT PANEL	AMPLI REI
CB98	26	10A	561792	S.S.JCT PANEL	RADIO REI
CB99	29	15A	561793	S.S.JCT PANEL	SEAT AUDIO SYS. REI
CB105	27	6A	561790	FR JCT BOX	E.C.U. ABS
CB106	27	10A	561792	FR JCT BOX	E.C.U. ABS
CB107	27	10A	561792	FR JCT BOX	E.C.U. ABS
CB109	23	8A	561791	RR JCT BOX	LAVATORY FAN & NIGHT LT
CB110	25	3A	561797	FR JCT BOX	LUGGAGE DOOR LOCK
CB113	11	10A	561792	RR JCT BOX	DOCKING LTS
CB121	28	20A	561794	FR JCT BOX	HEATING WINDSHEILD LH
CB122	28	20A	561794	FR JCT BOX	HEATING WINDSHEILD RH
CB124	8	6A	561790	RR JCT BOX	RADIATOR FAN CLUTCH
CB125	32,35	8A	561791	RR JCT BOX	POWER SYSTEM (WCL)
CB126	32	150A	560299	BAT CPT	HYD. MOTOR PUMP (WCL ST & ST)
CB126	35	90A	560298	BAT CPT	HYD. M OTOR PUMP (WCL RICON 9)

CIRCUIT BREAKER CODE (CB) Page F : 1

NO.	PAGE	AMPERE	#PREVOST	LOCATION	FUNCTION
CB1	2	40A	560703	BAT CPT	12V IGNITION
CB2	1	30A	870690	BAT CPT	12V HOT WIRE
CB3	1	40A	560703	BAT CPT	12V FEED RR JCT BOX
CB4	1	40A	560703	BAT CPT	12V FEED FR JCT BOX
CB5	1	30A	870690	BAT CPT	24V HOT WIRE
CB6	1	90A	560298	BAT CPT	24V FEED RJ B & STARTER RLY
CB7	1	90A	560298	BAT CPT	24V FEED FJB & INVERTER CPT
CB8	1	150A	560299	BAT CPT	A/C JCT BOX & EVAP. FAN
CB9	1	150A	560299	BAT CPT	CONDENSER FAN MOTOR
CB10	4	8A	561791	FR JCT BOX	MASTER SWITCH
CB11	30	8A	561791	GALLEY	RH HEATING CONTAINER
CB12	30	8A	561791	GALLEY	LH HEATING CONTAINER
CB13	30	6A	561790	GALLEY	REFRIGERATOR
CB14	33	15A	561793	RR JCT BOX	PRE-HEAT WATER HEATER (WEBASTO)
CB15	33	15A	561793	RR JCT BOX	PRE-HEAT WATER HEATER
CB16	4	8A	561791	RR JCT BOX	ENGINE-RR CTR & START SW
CB18	4	6A	561791	RR JCT BOX	ENGINE-FR CTR SW
CB19	5	15A	561793	BAT CPT	E.C.M. DDEC III
CB20	5	15A	561793	BAT CPT	E.C.M. DDEC III
CB21	5	6A	561790	BAT CPT	12V IGNITION DDEC III
CB24	6	20A	561794	BAT CPT	V.I.M. WORLD TRANSMISSION
CB26	11	10A	561792	RR JCT BOX	BACK-UP LTS
CB27	7	8A	561791	FR JCT BOX	24V IGN DASH ACCESSORIES
CB28	7	6A	561790	FR JCT BOX	12V IGN. VOLTMETER & SPEEDO-TACHO
CB29	7	20A	561794	FR JCT BOX	ELECTRICAL HORNS
CB30	7	6A	561790	FR JCT BOX	FIRE ALARM
CB31	8	8A	561791	RR JCT BOX	AIR DRYER
CB32	8	6A	561790	FR JCT BOX	ETHER COLD START & CRUISE DECEL
CB33	8	6A	561790	FR JCT BOX	PARKING BRAKE SW
CB34	11	10A	561792	RR JCT BOX	BACK-UP ALARM
CB35	11	6A	561790	FR JCT BOX	FOG & HAZARD SW
CB36	11	15A	561793	FR JCT BOX	FOG LTS
CB37	9	6A	561790	FR JCT BOX	HEAD & MULTI-FUNC. SW
CB38	9	10A	561792	FR JCT BOX	FR MARKER LTS
CB39	9	20A	561794	FR JCT BOX	CLEARANCE & IDENT. LTS
CB40	9	8A	561791	FR JCT BOX	FR CLEARANCE & IDENT. LTS
CB41	9	8A	561791	RR JCT BOX	RR CLEARANCE & IDENT. LTS
CB42	9	8A	561791	RR JCT BOX	RR MARKER,TAIL,LICENCE LTS
CB43	9	20A	561794	FR JCT BOX	HEADLAMP (HI)
CB44	9	15A	561793	FR JCT BOX	HEADLAMP (LO)
CB45	10	10A	561792	FR JCT BOX	MULTI-FUNC. SW (WIPER CTR)
CB46	10	20A	561794	FR JCT BOX	FLASHER & HAZARD UNIT
CB47	10	10A	561792	FR JCT BOX	CORNERING LTS
CB48	11	6A	561790	FR JCT BOX	STOP SW
CB49	11	15A	561793	RR JCT BOX	STOP & CYCLOP LTS
CB50	14	6A	561790	RR JCT BOX	HAT RACK COMPT. LTS
CB51	12	10A	561792	FR JCT BOX	UP WINDSH. WIPER & WASHER
CB52	13	15A	561793	RR JCT BOX	LUGGAGE LTS & DOOR AJAR LTS
CB53	13	6A	561790	RR JCT BOX	ENGINE COMPT. LTS *** PRIOR REVISION 021
CB54	13	6A	561790	RR JCT BOX	FR SERVICE COMPT. LTS
CB55	14	8A	561791	RR JCT BOX	AILSE LTS
CB56	14	6A	561790	RR JCT BOX	EMERGENCY EXIT LTS
CB57	14	8A	561791	FR JCT BOX	DASH LTS RHEOSTAT
CB59	15	8A	561791	FR JCT BOX	DRIVER'S, READING & GENERAL - LTS
CB60	15	15A	561793	RR JCT BOX	READING LTS RH
CB61	15	15A	561793	RR JCT BOX	READING LTS LH
CB62	15	10A	561792	RR JCT BOX	GENERAL LTS
CB63	16	6A	561790	ALARM JCT BOX	110V FLUORESCENT LH
CB64	16	6A	561790	ALARM JCT BOX	110V FLUORESCENT RH

CIRCUIT BREAKER CODE (CB) Page F : 1

NO.	PAGE	AMPERE	#PREVOST	LOCATION	FUNCTION
CB65	16	10A	561792	RR JCT BOX	24V FLUORESCENT RH
CB66	16	10A	561792	RR JCT BOX	24V FLUORESCENT LH
CB67	17	6A	561790	FR JCT BOX	HOSTESS & PASSENGER CHIME
CB69	16	6A	561790	ALARM JCT BOX	GALLEY 110V REFRIGERATOR
CB70	18	6A	561790	FR JCT BOX	A/C & HEAT SW
CB71	18	10A	561792	A/C JCT BOX	A/C LOGIC PANEL
CB72	18	6A	561790	A/C JCT BOX	A/C COMPRESSOR CLUTCH
CB73	18	15A	561793	A/C JCT BOX	WATER PUMP
CB75	30	30A	870690	INVERTER COMPT	HEATING CONTAINERS
CB76	30	30A	870690	INVERTER COMPT	COFFEE MAKER
CB77	19	40A	560703	A/C JCT BOX	CONDENSER FAN MOTOR RH
CB78	19	40A	560703	A/C JCT BOX	CONDENSER FAN MOTOR LH
CB79	19	10A	561792	FR JCT BOX	DRIVER'S HTR FAN
CB80	31	8A	561791	FR JCT BOX	MIRROR-ADJUST & HEATED SW
CB81	20	15A	561793	FR JCT BOX	DRIVER'S WINDOW-LIFT & LIGHTER
CB82	28	10A	561792	FR JCT BOX	UPPER WINDSHIELD DEFROST
CB83	21	6A	561790	FR JCT BOX	TACHOGRAPH & WATER HEATER TIMER
CB84	20	3A	561792	FR JCT BOX	SUN VISOR
CB85	22	6A	561790	FR JCT BOX	ENTRANCE DOOR (SEDAN) & STEP LTS
CB86	23	8A	561791	RR JCT BOX	LAVATORY PUMP
CB88	23	6A	561790	RR JCT BOX	LAVATORY LTS
CB89	23	3A	561797	RR JCT BOX	LAVATORY FLUORESCENT
CB90	23	6A	561790	FR JCT BOX	FR DESTINATION SIGN
CB91	24	6A	561790	FR JCT BOX	DIGITAL THERMOMETER
CB92	24	6A	561790	FR JCT BOX	KNEELING SYSTEM
CB93	1	30A	870690	BAT CPT	SOUND SYSTEM 12V FEEDING
CB94	1	30A	870690	BAT CPT	SOUND SYSTEM 24V FEEDING
CB95	26	10A	561792	S.S.JCT PANEL	BACK-UP P.A. REI
CB96	26	10A	561792	S.S.JCT PANEL	CONTROL HEAD REI
CB97	26	10A	561792	S.S.JCT PANEL	AMPLI REI
CB98	26	10A	561792	S.S.JCT PANEL	RADIO REI
CB99	29	15A	561793	S.S.JCT PANEL	SEAT AUDIO SYS. REI
CB105	27	6A	561790	FR JCT BOX	E.C.U. ABS
CB106	27	10A	561792	FR JCT BOX	E.C.U. ABS
CB107	27	10A	561792	FR JCT BOX	E.C.U. ABS
CB109	23	8A	561791	RR JCT BOX	LAVATORY FAN & NIGHT LT
CB110	25	3A	561797	FR JCT BOX	LUGGAGE DOOR LOCK
CB113	11	15A	561793	RR JCT BOX	DOCKING LTS & ENGINE CPT LTS
CB121	28	20A	561794	FR JCT BOX	HEATING WINDSHEILD LH
CB122	28	20A	561794	FR JCT BOX	HEATING WINDSHEILD RH
CB124	8	6A	561790	RR JCT BOX	RADIATOR FAN CLUTCH
CB125	32,35	8A	561791	RR JCT BOX	POWER SYSTEM (WCL)
CB126	32	150A	560299	BAT CPT	HYD. MOTOR PUMP (WCL ST & ST)
CB126	35	90A	560298	BAT CPT	HYD. M OTOR PUMP (WCL RICON 9)

LAZER FORMAT "A" CHELLE 8.2:

CONNECTORS CODE ID Page G-1

No.	LOCATION	#WD TYPE	*PIN CAVITY	*SOCKET HOUSING	HOUSING
C1	FR JCT BDO COMPARTMENT	AMP CPC	37	560644	560646
C2	FR JCT BDO COMPARTMENT	AMP CPC	24	560641	560643
C3	FR JCT BDO COMPARTMENT	AMP CPC	37	560714	560713
C4	FR JCT BDO COMPARTMENT	AMP CPC	16	560493	560495
C5	FR SERVICE COMPT.-UNDERNEATH	AMP CPC	37	560644	560646
C6	FR SERVICE COMPT.-UNDERNEATH	AMP CPC	24	560641	560643
C7	FR JCT BDO COMPT.-UNDERNEATH	AMP CPC	37	560714	560716
C8	FR SERVICE COMPT.-UNDERNEATH	AMP CPC	37	560714	560713
C9	ALARM JCT BDO	AMP CPC	37	560644	560646
C10	ALARM JCT BDO	AMP CPC	24	560641	560643
C11	FR SERVICE COMPARTMENT	AMP CPC	24	560642	560643
C12	FR SERVICE COMPARTMENT	AMP CPC	16	560639	560640
C13	LH CONSOLE-HEATER MOR.	AMP HML	2	561248	561247
C14	FR SERVICE COMPT.	AMP HML	8	560562	561315
C15	LH CONSOLE-CE THRROR	AMP HML	6	561552	561515
C16	UNDER DASH-LH MIRROR	AMP HML	6	561552	561515
C17	RR JCT BDO	AMP CPC	24	560641	560643
C18	LH CONSOLE-RH MIRROR	AMP HML	8	560562	561315
C19	LH CONSOLE-CE CTR MIRROR	AMP HML	6	561552	561515
C20	LH CONSOLE-CRUISE ON/OFF	SWF	8	------	561107
C21	LH CONSOLE-CRUISE RESUME	SWF	8	------	561107
C22	UNDER DASH-LH MIRROR	AMP HML	6	561552	561515
C23	RR JCT BDO	AMP CPC	37	560644	560646
C24	RR JCT BDO	AMP CPC	24	560641	560643
C25	HYD & HAN TRANSM.-NEUT.& B.U.	PED WP	4	561610	561611
C26	HYD & HAN TRANSM.-SPEED SENS.	PED WP	2	561766	561767
C27	DOOR ENGINE-ECH	PED	30	------	561600
C28	RR JCT BDO	AMP CPC	24	560641	560643
C29	EMERGENCY EXIT LTS	AMP HML	2	561248	561247
C30	RR SECTION-LH HAT RACK	AMP HML	6	560661	561662
C31	RR SECTION-RH HAT RACK	AMP HML	6	560661	561662
C32	RR JCT BDO	AMP CPC	16	560639	560640
C33	LAVATORY-ROOF FLUORESCENT	AMP HML	2	560920	560898
C34	LAVATORY-BACK WALL-WTR TANK	AMP HML	2	560920	560898
C35	LAVATORY-BACK WALL-ACCESS.	AMP HML	6	560661	561662
C36	ALARM JCT BDO COMPARTMENT	AMP CPC	24	560642	560643
C37	LAVATORY-ROOF FLUORESCENT	AMP HML	2	560920	560898
C38	BATTERY COMPARTMENT	AMP HML	4	561605	561517
C39	FR SERVICE COMPT.-LOW BLOC	PED WP	1	561605	561517
C40	FR JCT BDO	AMP CPC	22	560714	560716
C41	FR JCT BDO	AMP CPC	14	560585	560584
C42	UNDER DASH-RH SW PANEL	AMP CPC	9	560636	560637
C43	UNDER DASH-RH CONSOLE	AMP CPC	24	560642	560643
C44	UNDER DASH-RH ACCESSORIES	AMP CPC	22	561995	561718
C45	UNDER DASH-RH ACCESSORIES	AMP CPC	22	561995	561718
C46	EVAPORATOR COMPARTMENT	AMP HML	2	561248	561249
C47	FR JCT BDO COMPT.-L.T.	AMP HML	2	561248	561247
C48	LUGGAGE COMPARTMENT LTS	AMP HML	2	561248	561247
C49	LUGGAGE COMPARTMENT LTS	AMP HML	2	561248	561247
C50	LUGGAGE COMPARTMENT LTS	AMP HML	2	561248	561247
C51	LUGGAGE COMPARTMENT LTS	AMP HML	2	561248	561247

CONNECTORS CODE ID Page G-1

No.	LOCATION	#WD TYPE	*PIN CAVITY	*SOCKET HOUSING	HOUSING
C52	LUGGAGE COMPARTMENT LTS	AMP HML	2	561248	561247
C53	LUGGAGE COMPARTMENT LTS	AMP HML	2	561248	561247
C54	LUGGAGE COMPARTMENT LTS	AMP HML	2	561248	561247
C55	LUGGAGE COMPARTMENT LTS	AMP HML	2	561248	561247
C56	ALARM JCT BDO COMPARTMENT	AMP CPC	24	560642	560643
C57	UNDER INSTRUMENT PANEL-LH	AMP CPC	37	560645	560646
C58	UNDER INSTRUMENT PANEL-CENT.	AMP CPC	16	560639	560640
C59	UNDER INSTRUMENT PANEL-CENT.	AMP CPC	37	560714	560713
C60	ALARM JCT BDO COMPARTMENT	PED WP	2	561610	561611
C61	LUGGAGE COMPT.-AIR RET.SENS.	AMP HML	2	561248	561247
C62	LUGGAGE COMPT.-AIR RET.SENS.	AMP HML	2	561248	561247
C63	FR JCT BDO COMPARTMENT	AMP CPC	22	561791	561718
C64	FR SERVICE COMPT.-UNDERNEATH	AMP CPC	37	560644	560646
C65	LUGGAGE COMPT.-AIR RET.SENS.	AMP HML	2	561248	561247
C66	LUGGAGE COMPT.-AIR RET.SENS.	AMP HML	2	561248	560898
C67	ENTRANCE DOOR	MODULE	6	562078	562069
C68	ENTRANCE DOOR-PRIORITY MOD.	MODULE	6	562078	561476
C69	ENTRANCE DOOR-PRESSURE SW.	PED WP	1	561605	561517
C70	UNDER INSTRUMENT PANEL-LH	AMP HTA-100	8	------	562248
C71	BATT.& RR JB,OPT.MARKER,LT	PED WP	2	561610	561611
C72	FR JCT BDO COMPT.-LTS	AMP HML	2	561248	561247
C73	RR JCT BDO	AMP CPC	16	560639	560640
C74	FR JCT BDO	AMP CPC	14	560585	560584
C75	RR JCT BDO	AMP CPC	16	560639	560640
C76	FR JCT BDO COMPT.-HATS SKID	AMP CPC	16	560639	560637
C77	FR JCT BDO COMPT.-HATS SKID	AMP CPC	16	560639	560637
C78	FR AXLE ACCESSORIES	AMP CPC	14	560585	560585
C79	FR AXLE ACC.-INSIDE PVC END	PED WP	6	561566	561578
C80	FR SERVICE COMPT.-ELCF PEDAL	PED WP	3	561782	561781
C81	FR SERVICE COMPT.LTS	AMP HML	2	561248	561247
C82	FR SERVICE COMPT.-CONDENSER	PED WP	2	561566	560690
C83	FR SERVICE COMPT.-ELEC.-HORNS	PED WP	2	561566	561690
C84	FR SERV.-ABS LH SENSOR	WABCO	3	------	561862
C85	FR SERV.& EQUIP.-HARNESS	ITT SS	2	561813	561812
C86	FR SERVICE COMPT.-ELEC.-HORNS	PED WP	2	561566	561690
C87	FR SERVICE COMPT.-CELS.WALVE	PED WP	2	561566	561690
C88	FR SERVICE COMPT.-WATER VALVE	PED WP	2	561566	561690
C89	FR SERVICE COMPT.-DAMPER	PED WP	2	561566	561690
C90	FR SERVICE COMPT.-KNEEL.SYS	PED WP	2	561566	561690
C91	FR SERVICE COMPT.-KNEEL.SYS	PED WP	2	561566	561690
C92	FR SERVICE COMPT.-KNEEL.SYS	PED WP	2	561566	561690
C93	EVAPORATOR COMPT.-DAMPER	ITT SS	2	561813	561812
C94	BATT.& RR JB,OPT.MARKER,LT	ITT SS	2	561813	561812
C95	BATT.& RR JB,OPT.MARKER,LT	ITT SS	2	561813	561812
C96	ENGINE COMPT.-HYD.PUMP	PED WP	2	561566	561690
C97	ENGINE COMPT.-LTS	PED WP	2	561566	561690
C98	ENGINE COMPT.-LAVATORY FAN	TC	2	561938	562997
C99	ENGINE CPT RR DOOR LH,O LAMP	PED WP	6	561606	561687
C100	ENGINE CPT RR DOOR LH,I LAMP	PED WP	6	561606	561687
C101	BATTERY CPT.-DOOR DR L.T.IN	ITT SS	2	561813	561812
C102	ENGINE CPT-CHAMBER DOOR	AMP HML	2	561566	561698
C103	ENGINE CPT-ETHER SW	PED WP	2	561566	561690

CONNECTORS CODE ID Page G-2

No.	LOCATION	#WD TYPE	*PIN CAVITY	*SOCKET HOUSING	HOUSING
C125	ENGINE CPT-BU.U.ALARM	PED WP	2	561566	561690
C126	ENGINE CPT-FLUSHING PUMP	PED WP	2	561566	561690
C127	ENGINE CPT-FUEL FILTER	PED WP	2	561566	561690
C128	ENGINE CPT-U-C COMPRO.UTCH	ITT SS	2	561813	561812
C129	ENGINE CPT-PRE-HEAT WATER	PED WP	2	561566	561690
C130	ENGINE CPT-UNLOADER	ITT SS	2	561813	561812
C131	ENGINE CPT-RR DOOR U.L.T.	ITT SS	2	561813	561812
C132	ENGINE CPT-W/C L.O.PRESS SW	PED WP	2	561566	561690
C133	ENGINE CPT-RR DOOR LH,CLS.LT	PED WP	6	561606	561687
C134	ENGINE CPT-RR DOOR LH,OPN.LT	PED WP	6	561606	561687
C135	FR JCT BDO-LUGGAGE DOOR ENG.	AMP HML	15	561987	561986
C136	W/C JCT BDO	AMP CPC	24	562281	562284
C137	W/C JCT BDO-TRANSMITTER	AMP HML	2	560920	560898
C138	W/C JCT BDO-CONTROL MODULE	AMP HML	2	560920	560898
C139	W/C JCT BDO-L.DOOC MODULE	AMP-HDP	15	562811	------
C140	RH HAT RACK-DOOR LAMP	AMP HML	2	561248	561247
C141	LAVATORY-DOOR WALL	AMP HML	3	560908	562086
C142	ENTRANCE DOOR-PRIORITY MOD.	MODULE	6	562078	561476
C143	ENTRANCE DOOR-PRESSURE SW	PED WP	1	561605	561517
C144	ENGINE CPT-MODULATOR VALVE	AMPHENOL	2	------	562412
C145	BATT.& RR JB,OPT.MARKER	PED WP	2	561566	561690
C146	FR JCT BDO COMPT.-LTS	AMP HML	2	561248	561247
C147	UNDER DASH-RH-LOCK SOL.	AMP CPC	4	561562	561580
C148	UNDER DASH-RH-LOCK SOL.	AMP CPC	4	561562	561581
C149	UNDER DASH-RH-LOCK SOL.	AMP CPC	4	561562	561582
C150	UNDER DASH-RH-LOCK SOL.	AMP CPC	4	561562	561583
C151	FR JCT BDO-LUGGAGE DOOR ENG.	AMP HML	15	561987	561986
C152	CONDENSER CPT-FUEL GAUGE	PED WP	4	561610	561611
C153	EVAPORATOR CPT-AIR SENSOR	PED WP	2	561248	561247
C154	EVAPORATOR CPT-FRESH AIR SENS	ITT SS	2	561813	561812
C155	EVAPORATOR CPT-AIR SENSOR	PED WP	2	561248	561247
C156	EVAPOR. CPT-EVPRATOR SENS.	PED WP	2	561566	561690
C157	EVAPORATOR CPT-WATER PUMP	PED WP	2	561566	561690
C158	CONDENSER CPT-A.C.H.E.TEMP.	PED WP	2	561566	561690
C159	CONDENSER CPT-A.C.H.E TEMP.	PED WP	2	561566	561690
C160	FR AXLE-ABS RH VALVE	WABCO	3	------	641098
C161	FR AXLE-ABS RH VALVE	WABCO	3	------	641098
C162	FR AXLE-ABS LH VALVE	WABCO	3	------	641098
C163	FR AXLE-ABS LH SENSOR	WABCO	3	641132	------
C164	FR AXLE-ABS LH VALVE	WABCO	3	------	641098
C165	FR AXLE-ABS LH VALVE	WABCO	3	------	641098
C166	FR AXLE-ABS RH VALVE	WABCO	3	------	641098
C167	EVAPORATOR CPT-DAMPER	DEUTSCH	2	562486	562485
C168	ENGLOPT.-FUEL PRIME PUMP	FEED DEUTSCH	2	562486	562485
C169	RR JCT BDO-FLASHER UNIT	TC	2	------	561948
C170	FR JCT BDO-FLASHER UNIT	TC	2	------	561948
C171	ALARM JCT BDO-LH CONSOLE	AMP CPC	37	560645	560646
C172	ENGINE CPT-WATER TANK HEAT.	PED WP	2	561566	561698
C173	ENGINE CPT-WATER TANK HEAT.	PED WP	2	561566	561698
C174	ENGINE CPT-RR DOOR LH,OPN.LT	PED WP	6	561606	561687
C175	UNDER DASH-RH-HTR MODULE	AMP HML	9	561678	561669
C176	UNDER DASH-RH-WIPER PULSE	AMP FF	6	------	561186
C177	UNDER DASH-RH-WIPER MOTOR	AMP FF	6	------	561186
C178	UNDER DASH-RH-LH FAN	TC	2	561938	562997
C179	UNDER DASH-RH-RH FAN	TC	2	561938	562997
C180	RR JCT BDO-CONTROL MODULE	AMP HML	2	561566	561698
C181	RR JCT BDO COMPT.-AT KYH	AMP CPC	16	560639	560640
C182	FR SERVICE CPT-HEADLAMP	ITT SS	2	561813	561812
C183	FR SERVICE CPT-HEADLAMP	ITT SS	2	561813	561812
C184	FR JCT BDO COMPT.-AT KYH	AMP CPC	16	560639	560640
C185	RR JCT BDO COMPT.-AT KYH	PED	30	------	561600

CONNECTORS CODE ID Page G-2

No.	LOCATION	#WD TYPE	*PIN CAVITY	*SOCKET HOUSING	HOUSING
C186	RR JCT BDO CPT.-SPEED SIGN.TR	PED WP	2	561566	561690
C186RH	RR JCT BDO CPT.-SPD SIGN.H.TR	PED WP	2	561566	561690
C186W	RR JCT BDO CPT.-SPD SIGN.WT	PED WP	2	561566	561690
C187	RR JCT BDO-RHM RESISTOR CON.	AMP HML	6	561552	561515
C189	ENGINE CPT-PRE-HEAT WATER	PED WP	2	561566	561690
C190	ENGINE CPT-RR DOOR TAIL L.T	PED WP	2	561566	561690
C191	ENGINE CPT-RR DOOR STOP L.T	PED WP	2	561566	561690
C192	ENGINE CPT-RR DOOR RH,CLS.LT	PED WP	2	561566	561690
C193	ENGINE CPT-RR DOOR RH,OPN.LT	PED WP	2	561566	561690
C194	ENGINE CPT-RR DOOR RH,CLS.LT	PED WP	2	561566	561690
C195	ENGINE CPT-RR DOOR RH,OPN.LT	PED WP	2	561566	561690
C196	ENGINE CPT-RR DOOR,CLOP.L.T	PED WP	2	561566	561690
C197	ENGINE CPT-W/C COMPRESSOR	PED WP	4	561889	561890
C198	ENGINE CPT-COMPRESSOR	PED WP	4	561889	561890
C199	ENGINE CPT RR DOOR L,ICENSE L.T	DOH AUTO	2	930210	------
C200	RH HAT RACK-DOOR LAMP	AMP HML	2	561248	561247
C201	RH HAT RACK-FLUORESCENT	AMP HML	4	561951	561666
C202	RH HAT RACK-BALLAST	AMP HML	4	560851	560852
C203	RH HAT RACK-BALLAST	AMP HML	4	560851	560852
C204	RH HAT RACK-GENERAL LT	AMP HML	3	561667	561550
C205	RH HAT RACK-PAX SPEAKER	AMP HML	4	561661	561662
C206	RH HAT RACK-READING LT	AMP HML	2	562480	562898
C207	LH HAT RACK-READING LT	AMP HML	2	562480	562898
C208	LH HAT RACK-BALLAST	AMP HML	4	560851	560852
C209	LH HAT RACK-PAX SPEAKER	AMP HML	4	561661	561662
C211	FR ROOF-STORE LTN	AMP HML	2	562480	562898
C212	FR ROOF-STORE LTN	AMP HML	2	562480	562898
C213	FR ROOF-CLEARANCE L.T	AMP HML	2	562480	562898
C216	UNDER DASH-LH-P.A.	AMP HML	9	561678	561669
C217	UNDER DASH-LH-P.A.	AMP HML	3	------	561550
C218	UNDER DASH-LH-P.A.	AMP HML	3	------	561550
C219	UNDER DASH-LH-P.A.	AMP HML	3	------	561550
C220	PRJCT.BDO-FUEL PRIME PUMP	TC	3	560878	560873
C222	ALARM JCT BDO CPT.-DOOR	MOLEX	4	561477	561476
C223	ALARM JCT BDO CPT.-DRVL.SPEAK.	AMP HML	3	561550	561668
C224	ALARM JCT BDO CPT.-DRVL.SPEAK.	AMP HML	3	561550	561668
C227	RH SW.PANEL-HEATER	AMP HML	2	561248	561247
C228	RH SW.PANEL-HEORG OUTLET	MOLEX	4	561477	561476
C229	RH SW.PANEL-PA VOL.CONT.	MOLEX	4	561477	561476
C230	ENGLOPT.-FUEL PRIME PUMP	FEED DEUTSCH	2	562486	562485
C231	RR JCT BDO-PUMP SW.	PED WP	2	561566	561690
C232	ENGLOPT.-FUEL PRIME PUMP	PED WP	2	561566	561690
C233	INSTRUMENT PANEL CENTER	MOLEX	4	561477	561476
C234	INSTRUMENT PANEL CENTER	MOLEX	4	561477	561476
C235	INSTRUMENT PANEL CENTER	MOLEX	4	561477	561476
C236	INSTRUMENT PANEL CENTER	AMP HML	2	560852	560852
C237	UNDER DASH-LH-JACOB CLUTCH SW	ITT SS	3	561111	561080
C238	A-C JCT BDO-DIODE CONNECTOR	AMP HML	3	561678	561669
C239	FR SERVICE CPT-HI BEUT VALVE	PED WP	2	561566	561690
C240	FR SERVICE CPT-KNEEL PRSS SW	PED WP	2	561566	561690
C241	FR SERVICE CPT-FOG RESISTOR	AMP CPC	3	561847	561862
C242	FR SERVICE CPT-HEADLAMP	TC	3	561871	------
C243	FR SERVICE CPT-HEADLAMP	TC	3	561871	------
C244	FR SERVICE CPT-RH-FOG LAMP	ITT SS	2	561813	561812
C245	FR SERVICE CPT-RH-FOG LAMP	ITT SS	2	561813	561812
C246	FR SERVICE CPT-HARN.& DR.L.T	ITT SS	3	561111	561080
C248	ALARM JCT BDO-WIPER PULSE SEN	AMP FF	6	------	561186
C249	ALARM JCT BDO-CONN.12V TO 5V	AMP HML	3	561667	561550

CONNECTORS CODE ID Page G-3

No.	LOCATION	#WD TYPE	*PIN CAVITY	*SOCKET HOUSING	HOUSING
C250	ALARM JCT BDO-DASH L.TS REGUL.	AMP HML	6	561552	561515
C251	LH SW.PANEL-F-EXT DLE	SWF	8	------	561187
C252	LH SW.PANEL-SWITCH-LT	SWF	2	------	561837
C253	LH SW.PANEL-EHEW	SWF	8	------	561187
C254	INST.PANEL RH-ENTRJDOOR SW.	TORRY	5	------	562018
C255	LH SW.PANEL-WIPER	SWF	2	------	561837
C257	INSTRUMENT PANEL CENT-SPEEDO	AMP HML	4	560851	560852
C258	LH SW.PANEL-MULTI FUNC. SW	AMP F	8	------	561188
C259	LH SW.PANEL-MULTI FUNC. SW	AMP F	8	------	561188
C260	UNDER DASH-RH-DOOR MODULE	AMP HML	9	561678	561669
C261	UNDER DASH-RH-DOOR MODULE	AMP HML	4	561951	561668
C262	UNDER DASH-RH-DOOR MODULE	AMP HML	3	561667	561550
C263	UNDER DASH-RH-DOOR MODULE	AMP HML	3	561667	561550
C264	UNDER DASH-RH-DOOR MODULE	AMP HML	3	561667	561550
C265	UNDER DASH-RH-DOOR MODULE	AMP HML	3	561667	561550
C267	UNDER DASH-RH	AMP CPC	24	561642	561643
C268	UNDER DASH-RH-MIRROR	AMP HML	4	561552	561515
C269	UNDER DASH-RH-MIRROR	AMP HML	4	561552	561515
C270	RH MIRROR POST	MOLEX	4	561477	561476
C271	RH MIRROR POST	MOLEX	4	561477	561476
C272	LH MIRROR	SPARTAN	6	990158	------
C273	RH MIRROR	SPARTAN	6	990158	------
C274	RADIO	AMP HML	9	561678	561669
C275	UNDER DASH-RH-LOCK SOL.VLVE	AMP HML	2	561248	561247
C276	RH SW.PANEL-A/C & HEAT	SWF	8	------	561187
C277	RH SW.PANEL-PA ON/OFF	SWF	8	------	561187
C278	RH SW.PANEL-FRESH AIR	SWF	8	------	561187
C279	RH SW.PANEL-CENT.TAC & SPG.L	SWF	8	------	561187
C280	LH CONSOLE-CONT-VIDEO SYST.	AMP HML	6	560671	560668
C281	LH CONSOLE-CONT-VIDEO SYST.	AMP HML	6	560671	560668
C282	LH CONSOLE-CONT-VIDEO SYST.	AMP HML	6	560671	560668
C283	LH CONSOLE-SW.VIDEO SYST.	SWF	8	------	561187
C284	UNDER DASH-LH-P.A.	AMP HML	3	561667	561550
C285	UNDER DASH-LH-P.A.	AMP HML	3	------	561550
C286	UNDER DASH-LH-P.A.	AMP HML	3	------	561550
C287	UNDER DASH-LH-P.A.	AMP HML	3	------	561550
C288	LH CONSOLE-CONT-VIDEO SYST.	AMP HML	6	560671	560668
C289	LH CONSOLE-CONT-VIDEO SYST.	AMP HML	6	560671	560668
C290	LH CONSOLE-VIDEO SYST.	AMP HML	6	560671	560668
C291	LH CONSOLE-LCD VIDEO SYST.	AMP HML	6	560671	560668
C292	LH CONSOLE-LCD VIDEO SYST.	AMP HML	6	560671	560668
C293	LH CONSOLE-SW.VIDEO SYST.	SWF	8	------	561187
C294	LH CONSOLE-SW.VIDEO SYST.	SWF	8	------	561187
C295	LH CONSOLE-SW.VIDEO SYST.	SWF	8	------	561187
C296	LH CONSOLE-SW.VIDEO SYST.	SWF	8	------	561187
C297	LH CONSOLE-CENT-VIDEO SYST.	AMP HML	6	560671	560668
C298	LH CONSOLE-CONT-VIDEO SYST.	AMP HML	6	560671	560668
C299	LH CONSOLE-CONT-VIDEO SYST.	AMP HML	6	560671	560668
C300	INVERTER CONPT.	AMP CPC	16	561639	561640
C301	INSTRUMENT PANEL CENT-MAIN	AMP HML	4	560851	560852
C302	INVERTER COMPT-GALLEY STR.	AMP HML	9	561661	561662
C303	LH CONSOLE-SW.PRESSTAT	SWF	8	------	561187
C304	LH CONSOLE-SW.PRESSTAT	SWF	8	------	561187
C305	LH CONSOLE-SW.HREOSTAT	AMP HML	2	561248	561247
C306	LH CONSOLE-SW.CONTROL	AMP HML	2	561248	561247
C307	LH CONSOLE-SW.LUGG.DOOR LOK	DEUTSCH	2	562486	562485
C308	LH CONSOLE-SW.HREOSTAT	AMP HML	2	561248	561247
C309	LH CONSOLE-SW.CONTROL	AMP HML	2	561248	561247
C310	LH CONSOLE-SW.HEADING L.TS	SWF	8	------	561187
C311	LH CONSOLE-SW.HEADING L.TS	SWF	8	------	561187
C312	LH CONSOLE-SW.CEN & FLOOR L.TS	SWF	8	------	561187
C313	LH CONSOLE-SW.FR DECS.SIGN	SWF	8	------	561187
C314	LH CONSOLE-SW.FR DECS.SIGN	SWF	8	------	561187
C315	LH SW.PANEL-SW.CPN WINDOW	SWF	8	------	561187
C316	LH CONSOLE-SW.CPN WINDOW LIFT	SWF	8	------	561187
C317	LH CONSOLE-SW.DRIVER'S LTS	SWF	8	------	561187
C318	LH CONSOLE-SW.WIND.LIFT NOT.	PED PO	2	------	561848
C319	LH CONSOLE-CRUISE CTR SW.PAN.	AMP CPC	9	561636	561637
C320	LH CONSOLE-RH-REFRIGERATOR	AMP HML	2	561248	561247
C325	LH CONSOLE-SW.KNEELING	SWF	8	------	561187
C326	LH CONSOLE-SW.DRVWL	SWF	8	------	561187
C327	ENGINE COMPT-RH START SW.BOX	AMP CPC	9	561636	561637

CONNECTORS CODE ID Page G-3

No.	LOCATION	#WD TYPE	*PIN CAVITY	*SOCKET HOUSING	HOUSING
C328	GALLEY-LAMP	AMP HML	2	561248	561247
C329	ENGINE TACHO SIGNAL	PED WP	2	561566	561689
C330	GALLEY-MICROWAVE SW.L.T	SWF	2	------	561837
C331	GALLEY-MICROWAVE SW	SWF	8	------	561187
C332	GALLEY-RH CONTAINER SW.L.T	SWF	2	------	561837
C333	GALLEY-RH CONTAINER SW	SWF	8	------	561187
C334	GALLEY-LH CONTAINER SW	SWF	8	------	561187
C335	GALLEY-LH CONTAINER SW.L.T	SWF	2	------	561837
C336	INSTRUMENT PANEL RH-DEF.SW.	AMP HML	3	561667	561550
C337	INSTR.PANEL-LH-DEFROSTER SW	SWF	8	------	561187
C338	INSTR.PANEL-LH-DEFROSTER SW	SWF	8	------	561187
C339	INSTR.PANEL-LH-UP WASHER SW	SWF	8	------	561187
C263	UNDER DASH-RH-DOOR MODULE	AMP HML	3	561667	560898
C264	UNDER DASH-RH-DOOR MODULE	AMP HML	3	561667	561558
C343	INSTR.PANEL-LH-HEADLAMP SW	SWF	8	------	561187
C344	INSTR.PANEL-LH-HAZARD L.T SW	SWF	8	------	561187
C345	INSTR.PANEL-LH-P.O.L.T SW	SWF	8	------	561187
C346	INSTR.PANEL-LH-SWITCH LTS	SWF	8	------	561837
C347	INSTR.PANEL-LH-SWITCH LTS	SWF	8	------	561837
C348	INSTRUMENT PANEL-FRT-HAZARD L	AMP HML	3	561667	561558
C349	RH CONSOLE-RED LED HTR	AMP HML	2	561248	561247
C350	RH CONSOLE-CE THERMOR	AMP HML	3	561667	561558
C351	LH HAT RACK-FLUOR 110V	MOLEX	4	561477	561476
C352	RH CONSOLE-OPN TEMP SENSOR	BURNDY	1	------	561518
C353	INSTR.PANEL-RH-OPN FAN RHEOST	AMP HML	6	561552	561515
C354	INSTR.PANEL-RH-OPN TEMP SW.	AMP HML	6	561552	561515
C355	INSTR.PANEL-RH-FR TEMP CTR	AMP HML	3	561667	561558
C356	INSTR.PANEL-RH-FR TEMP CTR	AMP HML	3	561667	561558
C357	INSTR.PANEL-RH-FUEL LEVEL GA	AMP HML	6	561552	561515
C358	INSTR.PANEL CENT-TAC & SPG.L T	AMP HML	2	562480	562898
C359	INSTRUMENT PANEL-RH-DEF.SW.	AMP HML	3	561667	561241
C360	RH CONSOLE-WIPER MOTOR	AMP FF	6	------	561186
C362	RH ROOF-LAVATORY OCCUPIED L	AMP HML	2	561248	561247
C363	FR ROOF-WATCH YOUR STEP L.T	AMP HML	2	561248	561247
C364	FR ROOF-WINDSHIELD DEFROST	AMP HML	3	561667	561558
C365	FR ROOF-UP WINDSHIELD DEFROST	AMP HML	3	561667	561558
C366	FR ROOF-DEST.SIGN L.T	AMP HML	2	562480	562898
C367	ENGINE COMPT-DOOR COL. L.T	AMP HML	2	561566	561698
C368	FR ROOF-DEST.SIGN BALLAST	AMP HML	3	561667	561558
C369	FR ROOF-DEST.SIGN OPEN.SW	TORRY	5	------	562018
C370	FR ROOF-DEST.SIGN FLUOR.	AMP HML	2	562480	562898
C371	FR ROOF-DEST.SIGN FLUOR.	AMP HML	2	562480	562898
C372	FR ROOF-DEST.SIGN SPEED SW.	MOLEX	4	561477	561476
C374	ALARM JCT BDO-CONT-MASTER SW	AMP HML	6	561552	561515
C375	ALARM JCT BDO CONPT-LH CONSOL	AMP HML	6	561552	561515
C376	ALARM JCT BDO-CONT-LH CONSOL	AMP HML	3	561667	561550
C377	LH SW.PANEL-SW.CPN WINDOW	SWF	8	------	561187
C380	LH CONSOLE-CONT-DOOR CONTROL	DEUTSCH	6	562366	------
C383	ALARM JCT BDO-CPT.-W/O WIRE	DEUTSCH	2	562486	562247
C385	FR SERV

LAZER FORMAT "A" CHALLE 2:

CONNECTORS CODE ID Page G-1

No.	LOCATION	#HD TYPE	*PIN CAVITY	*SOCKET HOUSING	HOUSING
C1	FR JCT BDI COMPARTMENT	AMP CPC	37	560644	560646
C2	FR JCT BDI COMPARTMENT	AMP CPC	24	560641	560643
C4	FR JCT BDI COMPARTMENT	AMP CPC	37	560714	560713
C4	FR JCT BDI COMPARTMENT	AMP CPC	16	560693	560695
C5	FR SERVICE COMPT.-UNDERHEATH	AMP CPC	37	560644	560646
C6	FR SERVICE COMPT.-UNDERHEATH	AMP CPC	24	560641	560643
C7	FR JCT BDI COMPT.-UNDERHEATH	AMP CPC	37	560787	560786
C8	FR SERVICE COMPT.-UNDERHEATH	AMP CPC	37	560714	560713
C9	ALARM JCT BDI	AMP CPC	37	560644	560646
C10	ALARM JCT BDI	AMP CPC	37	560644	560646
C11	FR SERVICE COMPARTMENT	AMP CPC	24	560642	560643
C12	FR SERVICE COMPARTMENT	AMP CPC	16	560639	560640
C12	LH CONSOLE-HEATER MOR.	AMP HML	2	561248	561247
C13	FR SERVICE COMPT.	AMP HML	8	560552	560515
C13	LH CONSOLE-C.ETR.HORROR	AMP HML	6	561552	561515
C14	UNDER DASH-LH HORROR	AMP HML	6	561552	561515
C15	RR JCT BDI	AMP CPC	24	560641	560643
C15	UNDER DASH-RH HORROR	AMP HML	6	561552	561662
C16	LH CONSOLE-E.SW-CRUISE ON-OFF	SWF	8	------	561037
C17	LH CONSOLE-E.SW-CRUISE RESUME	SWF	8	------	561037
C18	LH CONSOLE-E.SW-CRUISE SET	SWF	8	------	561037
C20	RR JCT BDI	AMP CPC	37	560644	560646
C21	RR JCT BDI	AMP CPC	24	560641	560643
C26	HYD & HVAC TRANSDS.-NEUT.& B-U	PED WP	4	561610	561611
C31	HYD & HVAC TRANSDS.-SPEED SENS.	PED WP	2	561766	561767
C32	DDEC ENGINE-ECM	PED	30	------	561600
C34	RR JCT BDI	AMP CPC	24	560641	560643
C36	EMERGENCY-EXIT LTS	AMP HML	2	561248	561247
C37	RR SECTION-LH-HAT RACK	AMP HML	9	561661	561662
C38	RR SECTION-RH-HAT RACK	AMP HML	9	561661	561662
C40	RR JCT BDI	AMP CPC	16	560639	560640
C41	LAVATORY-ROOF FLUORESCENT	AMP HML	2	560908	560898
C42	LAVATORY-BACK WALL-WTR TANK	AMP HML	2	560908	560898
C43	LAVATORY-BACK WALL-ACCESS.	AMP HML	9	561661	561662
C45	ALARM JCT BDI COMPARTMENT	AMP CPC	24	560642	560643
C46	FR SERVICE COMPT.-UNDERHEATH	AMP CPC	37	560644	560646
C49	WATERER COMPT.-LOW BLOCK	AMP HML	2	561248	561247
C50	FR SERVICE COMPT.-LOW BLOCK	PED WP	1	561605	561517
C52	RR JCT BDI	AMP CPC	22	560718	560717
C53	RR JCT BDI	AMP CPC	14	560585	560584
C54	UNDER DASH-LH HUT	AMP HML	6	561552	561515
C55	UNDER DASH-RH SW PANEL	AMP CPC	9	560636	560637
C56	UNDER DASH-RH CONSOLE	AMP CPC	24	560642	560643
C57	UNDER DASH-RH ACCESSORIES	AMP CPC	22	561995	561718
C58	UNDER DASH-RH ACCESSORIES	AMP CPC	22	561995	561718
C59	EVAPORATOR COMPARTMENT	AMP HML	2	561248	561249
C60	RR JCT BDI COMPT.-L.T.	AMP HML	2	561248	561247
C61	LUGGAGE COMPARTMENT LTS	AMP HML	2	561248	561247
C62	LUGGAGE COMPARTMENT LTS	AMP HML	2	561248	561247
C63	LUGGAGE COMPARTMENT LTS	AMP HML	2	561248	561247
C64	LUGGAGE COMPARTMENT LTS	AMP HML	2	561248	561247
C65	LUGGAGE COMPARTMENT LTS	AMP HML	2	561248	561247

CONNECTORS CODE ID Page G-1

No.	LOCATION	#HD TYPE	*PIN CAVITY	*SOCKET HOUSING	HOUSING
C66	LUGGAGE COMPARTMENT LTS	AMP HML	2	561248	561247
C67	LUGGAGE COMPARTMENT LTS	AMP HML	2	561248	561247
C68	LUGGAGE COMPARTMENT LTS	AMP HML	2	561248	561247
C69	RH AVLE ACC-INSIDE PVC END	PED WP	6	561568	561578
C70	ALARM JCT BDI COMPARTMENT	AMP CPC	24	560642	560643
C71	UNDER INSTRUMENT PANEL-LH	AMP CPC	37	560645	560646
C72	UNDER INSTRUMENT PANEL-CENT.	AMP CPC	37	560645	560646
C73	UNDER INSTRUMENT PANEL-CENT.	AMP CPC	16	560639	560640
C74	UNDER INSTRUMENT PANEL-CENT.	AMP CPC	16	560639	560640
C75	ALARM JCT BDI COMPARTMENT	AMP CPC	37	560644	560646
C76	LUGGAGE COMPT.-AIR RET.SENS.	AMP HML	2	561248	561247
C77	LUGGAGE COMPT.-AIR RET.SENS.	AMP HML	2	561248	561247
C78	FR JCT BDI COMPARTMENT	AMP CPC	22	561791	561718
C79	FR SERVICE COMPT.-UNDERHEATH	AMP CPC	37	560644	560646
C80	LUGGAGE COMPT.-AIR RET.SENS.	AMP HML	2	561248	561247
C81	PASSENGER COMPT.-HOLE L.T.S	AMP HML	2	561248	560898
C82	ENTRANCE DOOR	HDLEX	6	562079	562069
C83	ENTRANCE DOOR-PRESSURE SWITCH	AMP HML	2	561248	561476
C84	ENTRANCE DOOR-PRESSURE SW.	PED WP	1	561605	561517
C85	UNDER INSTRUMENT PANEL-LH	AMP HTA-100	8	------	562248
C87	BATT.& RR JUL.CPT.-SWITCH	PED WP	1	561605	561517
C88	FR JCT BDI COMPT.-L.T.S	AMP HML	2	561248	561247
C90	RR END ROOF-CLEARANCE LTS	AMP HML	2	560908	560898
C91	RR END ROOF-BLU.NONITOR	AMP CPC	14	561582	561581
C92	RR JCT BDI	AMP CPC	15	561587	561586
C93	RR JCT BDI	AMP CPC	37	561714	561713
C94	FR JCT BDI COMPT.-WATI SKID	AMP CPC	15	561635	561637
C95	FR JCT BDI COMPT.-WATI SKID	AMP CPC	15	561635	561637
C96	FR AVLE ACCESSORIES	AMP CPC	14	560585	560584
C97	RH AVLE ACC-INSIDE PVC END	PED WP	6	561568	561578
C98	FR SERVICE COMPT.-ELLIP.PEDAL	PED WP	3	561782	561781
C99	FR SERVICE COMPT.LTS	AMP HML	2	561248	561247
C100	FR SERVICE COMPT.-CONDENSER	AMP HML	2	561568	560298
C101	FR SERVICE COMPT.-ELEC.-HORNS	PED WP	2	561566	561569
C102	FR SERV.& EQ.COMPT.-FLUORES.	LH TL	9	561661	561662
C103	FR SERV.& EQ.COMPT.-INVERERS	ITT SS	2	561813	561812
C104	FR SERVICE COMPT.-CLS.& VALVE	PED WP	2	561566	561569
C105	FR SERVICE COMPT.-CLS.& VALVE	PED WP	2	561566	561569
C106	FR SERVICE COMPT.-WATER VALVE	PED WP	2	561566	561569
C107	EVAPORATOR COMPT.-DAMPER	PED WP	2	561566	561569
C108	FR SERVICE COMPT.-KNEEL.SYS	PED WP	2	561566	561569
C109	FR SERVICE COMPT.-KNEEL.SYS	PED WP	2	561566	561569
C110	FR SERVICE COMPT.-KNEEL.SYS	PED WP	2	561566	561569
C111	EVAPORATOR COMPT.-DAMPER	ITT SS	2	561813	561812
C113	BATT.& RR JUL.CPT.-MARKER L.T	ITT SS	2	561813	561812
C114	BATT.& RR JUL.CPT.-MARKER L.T	ITT SS	2	561813	561812
C115	ENGINE COMPT.-HYD.DRIVER	PED WP	2	561566	561569
C116	ENGINE COMPT.LTS	PED WP	2	561566	561569
C117	ENGINE COMPT.-LAVATORY FAN	TC	5	561938	562997
C118	ENGINE CPT RH DOOR-RH LO.LAMP	PED WP	6	561606	561607
C119	ENGINE CPT RH DOOR-LH LO.LAMP	PED WP	6	561606	561607
C120	BATTERE CPT.-DOOR SW.L.T.RH	ITT SS	2	561813	561812
C121	ENGINE CPT-CHAIRS DOOR CONNECTOR	AMP HML	2	561566	561678
C124	ENGINE CPT-ETHER SW	PED WP	2	561566	561678

CONNECTORS CODE ID Page G-2

No.	LOCATION	#HD TYPE	*PIN CAVITY	*SOCKET HOUSING	HOUSING
C125	ENGINE CPT-B.U.ALARM	PED WP	2	561566	561678
C126	ENGINE CPT-FLUSHING PUMP	PED WP	2	561566	561678
C127	ENGINE CPT-FUEL FILTER	PED WP	2	561566	561678
C128	ENGINE CPT-L+C COMPRO.LUTCH	ITT SS	2	561813	561812
C129	ENGINE CPT-WAT.W.LVLT	PED WP	2	561566	561678
C130	ENGINE CPT-UNLOADER	ITT SS	2	561813	561812
C131	ENGINE CPT-UNLOADER	ITT SS	2	561813	561812
C132	ENGINE CPT-W.C.L.O.PRESS SW	PED WP	2	561566	561678
C133	ENGINE CPT-W.C.L.O.PRESS SW	PED WP	2	561566	561678
C134	ENGINE CPT RH DOOR-LH COL.LT	AMP HML	6	561606	561607
C135	FR JCT BDI-LUGGAGE DOOR CONS.	AMP HML	15	561787	561786
C136	A-/C JCT BDI	AMP CPC	18	562285	562284
C137	A-/C JCT BDI-TRANSMITTER	AMP HML	2	560908	560898
C138	A-/C JCT BDI-CONTROL MODULE	AMP HML	2	560908	560898
C139	A-/C JCT BDI-L.DOOC MODULE	AMP-HDP	15	562811	------
C140	RH-HAT RACK-DOOR LAMP	AMP HML	9	561661	561662
C141	LAVATORY-DOOR WALL	AMP HML	3	560908	560886
C142	ENGINE CPT-RH DOOR-LO.LAMP	PED WP	6	561606	561607
C203	RH-HAT RACK-BALLAST	AMP HML	9	561661	561662
C204	RH-HAT RACK-GENERAL LT	AMP HML	9	561661	561662
C205	RH-HAT RACK-SPEAKER AMP HML	9	561661	561662
C206	RH-HAT RACK-READING LT	AMP HML	2	560908	560898
C207	LH-HAT RACK-READING LT	AMP HML	2	560908	560898
C208	LH-HAT RACK-BALLAST	AMP HML	4	560851	560852
C209	FR SECT.-LH-HAT RACK SPEAKER	AMP HML	9	561661	561662
C211	FR ROOF-STORE LTH	AMP HML	2	560908	560898
C212	FR ROOF-CLEARANCE L.T	AMP HML	2	560908	560898
C213	FR ROOF-CLEARANCE L.T	AMP HML	2	560908	560898
C216	UNDER DASH-LH-P.A.	AMP HML	9	561678	561687
C217	UNDER DASH-LH-P.A.	AMP HML	3	------	561550
C218	UNDER DASH-LH-P.A.	AMP HML	3	------	561550
C219	UNDER DASH-LH-P.A.	AMP HML	3	------	561550
C220	PALJCT.BDI-FUEL PRIME PUMP	TC	1	560878	560873
C222	ALARM JCT BDI CPT.-SPD SIGN.	HDLEX	4	561477	561476
C223	ALARM JCT BDI CPT.-DRIVL.SPD.SIG.	AMP HML	4	560550	560468
C224	ALARM JCT BDI CPT.-SPD SIGN.WT	PED WP	2	561566	561569
C227	RH SW.PANEL-SPEAKER	AMP HML	9	561661	561662
C228	RH SW.PANEL-MICRO DUTLET	HDLEX	4	561477	561476
C229	RH SW.PANEL-PA VOL.CONTROL	HDLEX	4	561477	561476
C230	ENGLOPT.-FUEL PRIME PUMP FEED	DEUTSCH	2	562486	562495
C231	RR JCT BDI-PUMP SW.	PED WP	15	------	561762
C232	ENGLOPT.-FUEL PRIME PUMP	PED WP	2	561566	561569
C233	INSTRUMENT PANEL CENTER	VJDL	8	------	561643
C234	INSTRUMENT PANEL CENTER	VJDL	4	------	562844
C235	INSTRUMENT PANEL CENTER	VJDL	4	------	562844
C236	INSTRUMENT PANEL CENTER	AMP HML	2	560908	560852
C237	UNDER DASH-LH-JACOB CLUTCH SW	ITT SS	3	561111	561080
C238	A-/C JCT BDI-DIODE CONNECTOR	AMP HML	9	561678	561687
C239	FR SERVICE CPT-HI BUOY VALVE	PED WP	2	561566	561569
C240	FR SERVICE CPT-KNEEL PRSD SW	PED WP	2	561566	561569
C241	FR SERVICE CPT-FOG RESISTOR	AMP CPC	3	561847	561862
C242	FR SERVICE CPT-HEADLAMPS	TC	5	561938	562997
C243	FR SERVICE CPT-HEADLAMPS	TC	3	561871	------
C244	FR SERVICE CPT-RH FOG LAMP	ITT SS	2	561813	561812
C245	FR SERVICE CPT-RH FOG LAMP	ITT SS	2	561813	561812
C246	FR SERVICE CPT-HARN.& DIR.L.T	ITT SS	3	561111	561080
C248	ALARM JCT BDI-WIPER PULSE GEN.HVF	TC	6	------	561189
C249	ALARM JCT BDI-CONN.12V TO 5V HVF	HML	3	561667	561650

CONNECTORS CODE ID Page G-2

No.	LOCATION	#HD TYPE	*PIN CAVITY	*SOCKET HOUSING	HOUSING
C286	RR JCT BDI CPT.-SPEED SIGN.TR.PED	AMP	2	561566	561678
C288	RR JCT BDI CPT.-SPD SIGN.W.TR.PED	AMP	2	561566	561678
C289	RR JCT BDI CPT.-SPD SIGN.WT PED	AMP	2	561566	561678
C287	RR JCT BDI-RRH RESISTOR CON.	AMP HML	6	561552	561515
C291	ENGINE CPT RH DOOR-LLS T	PED WP	2	561566	561678
C292	ENGINE CPT RH DOOR TAIL LS T	PED WP	2	561566	561678
C293	ENGINE CPT RH DOOR-RH DIR.L.T	PED WP	2	561566	561678
C294	ENGINE CPT RH DOOR-LH DIR.L.T	PED WP	2	561566	561678
C295	ENGINE CPT RH DOOR-RH STOP.L.T	PED WP	2	561566	561678
C296	ENGINE CPT RH DOOR-LH STOP.L.T	PED WP	2	561566	561678
C297	ENGINE CPT RH DOOR-C.O.P.L.T	PED WP	2	561566	561678
C298	ENGINE CPT-A/C COMPRESSOR	PED WP	4	561889	561890
C299	ENGINE CPT-A/C COMPRESSOR	PED WP	4	561889	561890
C300	RH-HAT RACK-DOOR LIGHT	AMP HML	9	561661	561662
C301	ENGINE CPT RH DOOR-L.ICENSE L.T	DOH-AUTO	2	930210	------
C302	RH-HAT RACK-DOOR LIGHT	AMP HML	9	561661	561662
C303	RH-HAT RACK-FLUORESCENT	AMP HML	4	561551	561666
C304	RH-HAT RACK-GENERAL LT	AMP HML	9	561661	561662
C305	RH-HAT RACK-BALLAST	AMP HML	4	560851	560852
C306	RH-HAT RACK-READING LT	AMP HML	2	560908	560898
C307	LH-HAT RACK-READING LT	AMP HML	2	560908	560898
C308	LH-HAT RACK-BALLAST	AMP HML	4	560851	560852
C309	FR SECT.-LH-HAT RACK SPEAKER	AMP HML	9	561661	561662
C311	FR ROOF-STORE LTH	AMP HML	2	560908	560898
C312	FR ROOF-CLEARANCE L.T	AMP HML	2	560908	560898
C313	FR ROOF-CLEARANCE L.T	AMP HML	2	560908	560898
C316	UNDER DASH-LH-P.A.	AMP HML	9	561678	561687
C317	UNDER DASH-LH-P.A.	AMP HML	3	------	561550
C318	UNDER DASH-LH-P.A.	AMP HML	3	------	561550
C319	UNDER DASH-LH-P.A.	AMP HML	3	------	561550
C320	RR JCT BDI-FUEL PRIME PUMP	TC	1	560878	560873
C322	ALARM JCT BDI CPT.-SPD SIGN.W.TR	HDLEX	4	561477	561476
C323	ALARM JCT BDI CPT.-DRIVL.SPD.SIG.	AMP HML	4	560550	560468
C324	ALARM JCT BDI CPT.-SPD SIGN.WT	PED WP	2	561566	561569
C327	RH SW.PANEL-SPEAKER	AMP HML	9	561661	561662
C328	RH SW.PANEL-MICRO DUTLET	HDLEX	4	561477	561476
C329	RH SW.PANEL-PA VOL.CONTROL	HDLEX	4	561477	561476
C330	ENGLOPT.-FUEL PRIME PUMP FEED	DEUTSCH	2	562486	562495
C331	RR JCT BDI-PUMP SW.	PED WP	15	------	561762
C332	ENGLOPT.-FUEL PRIME PUMP	PED WP	2	561566	561569
C333	INSTRUMENT PANEL CENTER	VJDL	8	------	561643
C334	INSTRUMENT PANEL CENTER	VJDL	4	------	562844
C335	INSTRUMENT PANEL CENTER	VJDL	4	------	562844
C336	INSTRUMENT PANEL CENTER	AMP HML	2	560908	560852
C337	UNDER DASH-LH-JACOB CLUTCH SW	ITT SS	3	561111	561080
C338	A-/C JCT BDI-DIODE CONNECTOR	AMP HML	9	561678	561687
C339	FR SERVICE CPT-HI BUOY VALVE	PED WP	2	561566	561569
C340	FR SERVICE CPT-KNEEL PRSD SW	PED WP	2	561566	561569
C341	FR SERVICE CPT-FOG RESISTOR	AMP CPC	3	561847	561862
C342	FR SERVICE CPT-HEADLAMPS	TC	5	561938	562997
C343	FR SERVICE CPT-HEADLAMPS	TC	3	561871	------
C344	FR SERVICE CPT-RH FOG LAMP	ITT SS	2	561813	561812
C345	FR SERVICE CPT-RH FOG LAMP	ITT SS	2	561813	561812
C346	FR SERVICE CPT-HARN.& DIR.L.T	ITT SS	3	561111	561080
C348	ALARM JCT BDI-WIPER PULSE GEN.HVF	TC	6	------	561189
C349	ALARM JCT BDI-CONN.12V TO 5V HVF	HML	3	561667	561650

CONNECTORS CODE ID Page G-3

No.	LOCATION	#HD TYPE	*PIN CAVITY	*SOCKET HOUSING	HOUSING
C250	ALARM JCT BDI-DASH L.TS REGUL.	AMP HML	6	561552	561515
C251	LH SW.PANEL-F.AST DLE	SWF	8	------	561837
C252	LH SW.PANEL-SWITCH L.T	SWF	2	------	561837
C253	LH SW.PANEL-ETHER	SWF	8	------	561837
C254	INST.PANEL RH-ENTRADOOR SW.	TORRIX	5	------	562102
C255	LH SW.PANEL-HYD.PUMP	SWF	8	------	561837
C257	INSTRUMENT PANEL CENT-SPEEDO	AMP HML	4	560851	560852
C258	LH SW.PANEL-MULTI.FUNC.SW	AMP	8	------	561837
C259	LH SW.PANEL-MULTI.FUNC.SW	AMP	3	561667	561558
C260	UNDER DASH-RH DOOR MODULE	AMP HML	9	------	561037
C261	UNDER DASH-RH DOOR MODULE	AMP HML	9	561678	561687
C262	UNDER DASH-RH DOOR MODULE	AMP HML	4	561551	561668
C263	UNDER DASH-RH DOOR MODULE	AMP HML	3	561667	561558
C264	UNDER DASH-RH DOOR MODULE	AMP HML	3	561667	561558
C265	UNDER DASH-RH DOOR MODULE	AMP HML	2	560908	560852
C267	UNDER DASH-RH	AMP CPC	24	561642	561643
C268	UNDER DASH-RH-HORROR	AMP HML	4	561552	561515
C269	UNDER DASH-RH-HORROR	AMP HML	6	561552	561515
C270	RH-HORROR POST	HDLEX	4	561477	561476
C271	RH-HORROR POST	HDLEX	4	561477	561476
C272	LH HORROR	SPARTAN	6	990158	------
C273	RH-HORROR	SPARTAN	6	990158	------
C274	RADIO	AMP HML	9	561678	561687
C276	UNDER DASH-RH-LOCK SOL.VLVE	AMP HML	2	561248	561247
C286	RH SW.PANEL-A/C & HEAT	SWF	8	------	561837
C287	RH SW.PANEL-FRESH-AIR	SWF	8	------	561837
C288	RH SW.PANEL-FRESH-AIR	SWF	3	561667	561558
C289	RH SW.PANEL-FRESH-AIR	SWF	3	561667	561558
C290	LH CONSOLE-CONT-VIDEO SYST.	AMP HML	9	561678	561687
C293	LH CONSOLE-CONT-VIDEO SYST.	SWF	8	------	561837
C297	UNDER DASH-LH-L.TS	AMP HML	2	560908	560898
C298	LH CONSOLE-CONT-VIDEO SYST.	AMP HML	9	561678	561687
C299	UNDER DASH-LH-L.TS	AMP HML	2	560908	560898
C300	INVERTER CONT.	AMP CPC	16	561639	561640
C301	INSTRUMENTS CENT.-WATER	AMP HML	4	560851	560852
C303	INVERTER CONT.-GALLEY CTR.	AMP HML	9	561661	561662
C304	LH CONSOLE-SW.PRESET	TC	2	561838	560997
C305	LH CONSOLE-SW.PRESET	TC	2	561838	560997
C306	LH CONSOLE-SW.PRESET	TC	2	561838	560997
C307	DDEC ENGINE-ECM POWER	PED	30	------	561600
C308	LH CONSOLE-SW.RHEOSTAT	TC	2	561838	560997
C309	DDEC ENGINE-ECM POWER	PED	30	------	561600
C310	LH CONSOLE-SW.LUGG.DOOR LOK	DEUTSCH	2	562486	562495
C311	LH CONSOLE-SW.READING L.TS	SWF	8	------	561837
C312	LH CONSOLE-SW.CEN & FLOOR L.TS	SWF	8	------	561837
C313	LH CONSOLE-SW.PRESET.SIGN	SWF	8	------	561837
C314	LH CONSOLE-SW.PRESET.SIGN	SWF	8	------	561837
C315	LH CONSOLE-SW.STOP SIGN	SWF	8	------	561837
C316	LH CONSOLE-SW.OPN WINDOW LIFT	SWF	8	------	561837
C317	LH CONSOLE-SW.DRIVER'S L.TS	SWF	8	------	561837
C318	LH CONSOLE-SW.WIND.LIFT NOT PED	PED	2	------	561848
C320	LH CONSOLE-CRUISE CTR SW.PANEL	AMP CPC	9	561636	561637
C321	LH CONSOLE-T.-REFRIGERATOR	SWF	8	------	561837
C325	LH CONSOLE-SW.KNEELING	SWF	8	------	561837
C326	LH CONSOLE-SW.DRVMR	SWF	8	------	561837
C327	ENGINE COMPT-RH START SW.BOX	AMP CPC	9	561636	561637

CONNECTORS CODE ID Page G-3

No.	LOCATION	#HD TYPE	*PIN CAVITY	*SOCKET HOUSING	HOUSING
C328	GALLEY-LAMP	AMP HML	2	561248	561247
C329	ENGINE TACHO SIGNAL	PED WP	2	561566	561569
C330	GALLEY HICROWAVE SW.L.T	SWF	2	------	561837
C331	GALLEY HICROWAVE SW	SWF	8	------	561837
C332	GALLEY RH CONTAINER SW.L.T	SWF	2	------	561837
C333	GALLEY RH CONTAINER SW	SWF	8	------	561837
C334	GALLEY LH CONTAINER SW	SWF	8	------	561837
C335	GALLEY LH CONTAINER SW.L.T	SWF	2	------	561837
C336	INSTRUMENT PANEL RH-DIR.SIG.	AMP HML	3	561667	561558
C337	INSTRUMENT PANEL-DIR.SIG.	SWF	8	------	561837
C338	UNDER DASH-RH-DOOR MODULE	AMP HML	9	561678	561687
C362	UNDER DASH-RH-DOOR MODULE	AMP HML	4	561551	561668
C363	UNDER DASH-RH-DOOR MODULE	AMP HML	3	561667	561558
C364	UNDER DASH-RH-DOOR MODULE	AMP HML	3	561667	561558
C365	UNDER DASH-RH-DOOR MODULE	AMP HML	2	560908	560898
C366	UNDER DASH-RH-DOOR MODULE	AMP HML	2	560908	560898
C367	UNDER DASH-RH-DOOR MODULE	AMP HML	2	560908	560898
C368	UNDER DASH-RH-DOOR MODULE	AMP HML	2	560908	560898
C369	UNDER DASH-RH-DOOR MODULE	AMP HML	2	560908	560898
C370	RH-HORROR POST	HDLEX	4	561477	561476
C371	RH-HORROR POST	HDLEX	4	561477	561476
C372	RH-HORROR POST	HDLEX	4	561477	561476
C373	ALARM JCT BDI-CONT-MASTER SW.HVF	TC	6	561552	561515
C374	ALARM JCT BDI-CONT-LH CONSOL.HVF	HML	6	561552	561515
C375	ALARM JCT BDI-CONT-RH CONSOL.HVF	HML	6	561552	561515
C376	LH SW.PANEL-DIR.SIG.CONT.LEVER	SWF	8	------	561837
C380	LH CONSOLE-DDR CONNECTOR	DEUTSCH	6	562366	------
C383	ALARM JCT BDI-CPT.-HIC W/O WIRE	DEUTSCH	2	562486	562247
C385	FR SERV.COMPT-UNDERHEATH(C)	AMP HML	9	561661	561662
C386	LH CONSOLE-WCL POWER SYSTEM	SWF	8	------	561837
C387	RR JCT BDI-WCL	AMP HML	9	561661	561662

CONNECTORS CODE ID Page G-2

No.	LOCATION	#HD TYPE	*PIN CAVITY	*SOCKET HOUSING	HOUSING
C388	RR JCT BDI-WCL	AMP HML	12	561735	561734
C389	WCL REAR DOOR	HDLEX	4	561477	561476
C390	LAVATORY WALL-WCL REMOTE CTR	SWF	8	------	561187
C391	LAVATORY WALL-WCL	SWF	8	------	561187
C392	LAVATORY WCL SW.L.T.	SWF	2	------	561835
C393	LAVATORY WALL-WCL REMOTE S.TS.	AMP CPC	4	560686	560687
C394	UNDER INSTRUMENT PANEL-RH	AMP HML	4	560851	560852
C395	DRIVER'S COMPT.-B.U.MONITOR	AMP	8	------	561485
C396	DRIVER'S COMPT.-B.U.MONITOR	AMP	8	------	561485
C397	ENGINE COMPT.-CRANKS.ELEC.	DEUTSCH	2	562285	562284
C398	FR SECT.-LH-HAT RACK AMPL1	HDLEX	6	------	562464
C399	FR SECT.-LH-HAT RACK AMPL1	HDLEX	6	------	562465
C400	ENGINE COMPT.-BLOCK HEATER	PED WP	3	561783	561782
C401	FR SECT.-LH-HAT RACK AMPL1	HDLEX	6	------	562464
C402	RR DRIVE AXLE-AIR DRYER	PED WP	2	------	562251
C403	GALLEY FRIDGE-MOTOR	AMP HML	2	561248	561247
C404	FR JCT BDI COMPT.-WATI SKID	AMP HML	2	560908	560898
C405	FR JCT BDI COMPT.-WATI SKID	AMP HML	2	560908	560898
C408	ENGINE COMPT.-SIDING	PED WP	4	561626	561627
C409	ENGINE CPT.-LOW COOL.LEVEL	PED WP	2	562358	------
C410	FR JCT BDI-DIODE CONNECTOR	AMP HML	15	561787	561786
C411	FR JCT BDI-DIODE CONNECTOR	AMP HML	15	561787	561786
C412	LH SW.PANEL-MASTER SWITCH	SWF	8	------	561837
C413	ENG CPT-A/C HI UNLOAD RRS SW	PED WP	2	561566	561678
C414	FR SERVICE COMPT.	AMP HML	9	561678	561687
C415	ENGINE CMOOLE-FAN SIGNAL	PED WP	3	561781	561782
C416	ENGINE COMPT.-FAN SIGNAL	PED WP	3	561781	561782
C417	FRONT JCT BDI-CONN.PRESS.	AMP HML	15	561787	561786
C418	INSTR.PANEL LH-HTR WINDOW.SW	SWF	8	------	561037
C419	FR JCT BDI-FRONT DOOR JACOB	AMP HML	3	561667	561558
C420	ENGINE COMPT.-WEBASTO WATER-HTR	TC	2	561597	------
C421	ENGINE COMPT.-WEBASTO WATER-HTR	TC	1	561873	------
C422	ENGINE COMPT.-WEBASTO WATER-HTR	TC	2	561597	------
C423	LAVATORY-WATER CENTER	AMP HML	3	561667	561558
C424	FR JCT BDI-DIODES	AMP HML	15	561787	561786
C425	FR JCT BDI-DIOD

LAZER FORMAT "A" CHOICE 8.2

CONNECTORS CODE ID) Page G-1

No.	LOCATION	#NB TYPE	*PIN CAVITY	*SOCKET HOUSING	HOUSING
C1	FR JCT BDI COMPARTMENT	AMP CPC	37	560644	560646
C2	FR JCT BDI COMPARTMENT	AMP CPC	24	560641	560643
C3	FR JCT BDI COMPARTMENT	AMP CPC	37	560714	560713
C4	FR JCT BDI COMPARTMENT	AMP CPC	16	560793	560795
C5	FR SERVICE COMPT.-UNDERHEATH	AMP CPC	37	560644	560646
C6	FR SERVICE COMPT.-UNDERHEATH	AMP CPC	24	560641	560643
C7	FR JCT BDI COMPT.-UNDERHEATH	AMP CPC	37	560714	560716
C8	FR SERVICE COMPT.-UNDERHEATH	AMP CPC	37	560714	560713
C9	ALARM JCT BDI	AMP CPC	37	560644	560646
C10	ALARM JCT BDI	AMP CPC	37	560644	560646
C11	FR SERVICE COMPARTMENT	AMP CPC	24	560642	560643
C12	FR SERVICE COMPARTMENT	AMP CPC	24	560642	560643
C13	LH CONSOLE-HEATER MON.	AMP HML	2	561248	561247
C13	FR SERVICE COMPT.	AMP HML	3	560552	560515
C13	LH CONSOLE-CE TH.MIRROR	AMP HML	6	561552	561515
C14	UNDER DASH-LH MIRROR	AMP HML	3	560552	560515
C15	RR JCT BDI	AMP CPC	24	560641	560643
C16	UNDER DASH-RH MIRROR	AMP HML	6	561552	561562
C16	LH CONSOLE-SW-CRUISE ON-OFF	SWF	8	-------	561087
C17	LH CONSOLE-SW-CRUISE RESUME	SWF	8	-------	561087
C17	LH CONSOLE-SW-CRUISE SET	SWF	8	-------	561087
C20	RR JCT BDI	AMP CPC	37	560644	560646
C21	RR JCT BDI	AMP CPC	24	560641	560643
C26	HYD & HAN TRANSM.-NEUT.& B-U	PED WP	4	561610	561611
C27	HYD & HAN TRANSM.-SPEED SENS.	PED WP	2	561766	561768
C30	DDEC ENGINE-ECM	PED	30	-------	561600
C35	RR JCT BDI	AMP CPC	37	560644	560646
C36	EMERGENCY-EXIT LTS	AMP HML	2	562600	562898
C37	RR SECTION-LH-HAT RACK	AMP HML	5	561661	561662
C38	RR SECTION-RH-HAT RACK	AMP HML	5	561661	561662
C40	RR JCT BDI	AMP CPC	16	560639	560640
C41	LAVATORY-ROOF FLOORS.SECT	AMP HML	2	562600	562898
C42	LAVATORY-BACK WALL-WTR TANK	AMP HML	2	562600	562898
C43	LAVATORY-BACK WALL-ACCESS.	AMP HML	5	561661	561662
C45	ALARM JCT BDI COMPARTMENT	AMP CPC	24	560642	560643
C47	FR SERVICE COMPT.-UNDERHEATH	AMP CPC	37	560714	560713
C49	WATERE COMPT.-LOW BLOCK	AMP HML	1	561605	561517
C50	FR SERVICE COMPT.-LOW BLOCK	PED WP	1	561605	561517
C52	RR JCT BDI	AMP CPC	22	560718	560717
C53	RR JCT BDI	AMP CPC	14	560585	560584
C54	UNDER DASH-PA UNIT	AMP HML	6	561552	561515
C55	UNDER DASH-RH SW PANEL	AMP CPC	9	560636	560637
C56	UNDER DASH-RH CONSOLE	AMP CPC	24	560642	560643
C57	UNDER DASH-RH ACCESSORIES	AMP CPC	22	561995	561718
C58	UNDER DASH-RH ACCESSORIES	AMP CPC	22	561995	561718
C59	EVAPORATOR COMPARTMENT	AMP HML	2	562600	562898
C60	RR JCT BDI COMPT.-L/T	AMP HML	2	561248	561247
C61	LUGGAGE COMPARTMENT-LTS	AMP HML	2	561248	561247
C62	LUGGAGE COMPARTMENT-LTS	AMP HML	2	561248	561247
C63	LUGGAGE COMPARTMENT-LTS	AMP HML	2	561248	561247
C64	LUGGAGE COMPARTMENT-LTS	AMP HML	2	561248	561247
C65	LUGGAGE COMPARTMENT-LTS	AMP HML	2	561248	561247

CONNECTORS CODE ID) Page G-1

No.	LOCATION	#NB TYPE	*PIN CAVITY	*SOCKET HOUSING	HOUSING
C66	LUGGAGE COMPARTMENT-LTS	AMP HML	2	561248	561247
C67	LUGGAGE COMPARTMENT-LTS	AMP HML	2	561248	561247
C68	LUGGAGE COMPARTMENT-LTS	AMP HML	2	561248	561247
C69	LUGGAGE COMPARTMENT-LTS	AMP HML	2	561248	561247
C70	ALARM JCT BDI COMPARTMENT	AMP CPC	24	560642	560643
C71	UNDER INSTRUMENT PANEL-LH	AMP CPC	37	560645	560646
C72	UNDER INSTRUMENT PANEL-CENT.	AMP CPC	37	560645	560646
C73	UNDER INSTRUMENT PANEL-CENT.	AMP CPC	16	560639	560640
C74	ALARM JCT BDI COMPARTMENT	AMP CPC	24	560642	560643
C75	ALARM JCT BDI COMPARTMENT	PED WP	2	561610	561611
C76	LUGGAGE COMPT.-AIR RET.SENS.	AMP HML	2	561248	561247
C77	LUGGAGE COMPT.-AIR RET.SENS.	AMP HML	2	561248	561247
C78	FR JCT BDI COMPARTMENT	AMP CPC	22	561789	561718
C79	FR SERVICE COMPT.-UNDERHEATH	AMP CPC	37	560644	560646
C80	LUGGAGE COMPT.-AIR RET.SENS.	AMP HML	2	561248	561247
C81	PASSENGER COMPT.-HOLE L.TS	AMP HML	2	562600	562898
C82	ENTRANCE DOOR	HOLEX	6	562878	562869
C83	ENTRANCE DOOR-PRESSURE SW.	AMP HML	2	561248	561476
C84	ENTRANCE DOOR-PRESSURE SW.	PED WP	1	561610	561611
C85	UNDER INSTRUMENT PANEL-LH	AMP HTA-100	8	-------	562248
C87	BATT.& RR JUNCPT.CONNECT.	AMP CPC	9	560636	560637
C88	RR END ROOF-CLEARANCE LTS	AMP HML	2	562600	562898
C89	RR END ROOF-B-U HONITOR	AMP CPC	1	561562	561561
C90	RR JCT BDI	AMP CPC	15	561987	561986
C91	RR JCT BDI	AMP CPC	37	560714	560713
C92	RR JCT BDI COMPT.-HATI SKID	AMP CPC	5	561635	561637
C93	RR JCT BDI COMPT.-HATI SKID	AMP CPC	5	561635	561637
C94	FR AXLE ACCESSORIES	AMP HML	14	560585	560585
C97	RR AXLE ACC.-INSIDE PVC END	PED WP	6	561560	561578
C98	FR SERVICE COMPT.-ELCF PEDAL	PED WP	3	561780	561781
C99	FR SERVICE COMPT.-LTS	AMP HML	2	562248	562247
C100	FR SERVICE COMPT.-CONNECTS	PED WP	2	561560	562098
C101	FR SERVICE COMPT.-ELEC.-HORNS	PED WP	2	561566	561569
C102	FR SERV.& SIDE CPT.-FLUORS.L.TS	AMP HML	5	561661	561662
C103	FR SERV.& SIDE CPT.-MIRRORS	ITT SS	2	561813	561812
C104	FR SERVICE COMPT.-CELS.WALKT	PED WP	2	561566	561569
C105	FR SERVICE COMPT.-CELS.WALKT	PED WP	2	561566	561569
C106	FR SERVICE COMPT.-WATER VALVE	PED WP	2	561566	561569
C107	FR SERVICE COMPT.-DUMPER	PED WP	2	561566	561569
C108	FR SERVICE COMPT.-KNEELSYS	PED WP	2	561566	561569
C109	FR SERVICE COMPT.-KNEELSYS	PED WP	2	561566	561569
C110	FR SERVICE COMPT.-KNEELSYS	PED WP	2	561566	561569
C111	EVAPORATOR COMPT.-DAMPER	ITT SS	2	561813	561812
C113	BATT.& RR JUCPT.MARKER.LT	ITT SS	2	561813	561812
C114	BATT.& RR JUCPT.MARKER.LT	ITT SS	2	561813	561812
C115	ENGINE COMPT.-HYDROMIR	AMP HML	2	561248	561247
C116	ENGINE COMPT.-LTS	PED WP	2	561566	561569
C117	ENGINE COMPT.-LAVATORY FAN	TC	2	561268	562997
C121	ENGINE CPT RH DOOR-HL.O LAMP	PED WP	6	561606	561687
C122	ENGINE CPT RH DOOR-HL.O LAMP	PED WP	6	561606	561687
C123	BATTERE CPT.-DOOR SW.L.T RH	ITT SS	2	561813	561812
C124	ENGINE CPT-CHANGE DOOR VALVE	PED WP	2	561566	561569
C124	ENGINE CPT-ETHER SW	PED WP	2	561566	561569

CONNECTORS CODE ID) Page G-2

No.	LOCATION	#NB TYPE	*PIN CAVITY	*SOCKET HOUSING	HOUSING
C125	ENGINE CPT-B-U ALARM	PED WP	2	561566	561569
C126	ENGINE CPT-FLUSHING PUMP	PED WP	2	561566	561569
C127	ENGINE CPT-FUEL FILTER	PED WP	2	561566	561569
C128	ENGINE CPT-I/C COMPRO.LUTCH	ITT SS	2	561813	561812
C129	ENGINE CPT-PRE-HEAT WATER	AMP CPC	2	561612	561608
C131	UNDER INSTRUMENT PANEL-LH	AMP CPC	37	560645	560646
C132	UNDER INSTRUMENT PANEL-CENT.	AMP CPC	16	560639	560640
C133	UNDER INSTRUMENT PANEL-CENT.	AMP CPC	16	560639	560640
C134	ALARM JCT BDI COMPARTMENT	PED WP	2	561610	561611
C136	FR JCT BDI-LUGGAGE DOOR CONS.	AMP HML	15	561987	561986
C137	R-C JCT BDI	AMP CPC	48	562286	562284
C137	ENGINE CPT-I/C TRANSMITTER	AMP HML	2	562600	562898
C138	R-C JCT BDI-CONTROL MODULE	AMP CPC	37	560644	560646
C139	R-C JCT BDI-L.DOOC MODULE	AMP-HDP	35	562811	-------
C142	LUGGAGE COMPT.-HOLE L.TS	AMP HML	2	561248	561247
C143	LAVATORY-DOOR WALL	AMP HML	3	560808	562086
C200	RH-HAT RACK-FLUORESCENT	AMP HML	5	561661	561662
C203	RH-HAT RACK-BALLAST	AMP HML	5	561661	561662
C204	RH-HAT RACK-GENERAL LT	AMP HML	3	561667	561550
C205	RH-HAT RACK-SPEAKER JMP.	AMP HML	5	561661	561662
C206	RH-HAT RACK-READING LT	AMP HML	2	562600	562898
C207	LH-HAT RACK-READING LT	AMP HML	2	562600	562898
C208	LH-HAT RACK-BALLAST	AMP HML	4	560851	560852
C209	LH-HAT RACK-SPEAKER JMP.	AMP HML	5	561661	561662
C211	FR ROOF-STORE LIN	AMP HML	2	562600	562898
C212	FR ROOF-CLEARANCE L.T	AMP HML	2	562600	562898
C213	FR ROOF-CLEARANCE L.T	AMP HML	2	562600	562898
C216	UNDER DASH-LH-P.A.	AMP HML	5	561678	561687
C217	UNDER DASH-LH-P.A.	AMP HML	3	-------	561550
C218	UNDER DASH-LH-P.A.	AMP HML	3	-------	561550
C220	INJECT.BDI-FUEL PRIME PUMP	TC	3	560878	560873
C222	ALARM JCT BDI-CHT-DRYS.SW	HOLEX	4	561477	561476
C223	RH-AXLE-ABS LH SENSOR	W&BCO	3	-------	561550
C224	RH-AXLE-ABS LH SENSOR	W&BCO	2	641132	-------
C225	RH-AXLE-LH WHEEL	W&BCO	3	-------	561550
C226	RH-AXLE-RH WHEEL	W&BCO	3	-------	561550
C227	RH-AXLE-RH WHEEL	W&BCO	2	641132	-------
C228	RH SW.PANEL-HIGRO.OUTLET	HOLEX	4	561477	561476
C229	ENGCPT.-PA RH DOOR	DEUTSCH	2	562486	562475
C230	ENGCPT.-FUEL PRIME PUMP FEED	DEUTSCH	2	562486	562495
C231	ENGCPT.-FUEL PUMP SW.	PED WP	2	561566	561569
C232	ENGCPT.-FUEL PRIME PUMP	PED WP	2	561566	561569
C233	INSTRUMENT PANEL CENTER	HOLEX	4	561477	561476
C234	INSTRUMENT PANEL CENTER	H.DUL.	6	-------	562844
C235	INSTRUMENT PANEL CENTER	H.DUL.	6	-------	562844
C236	INSTRUMENT PANEL CENTER	AMP HML	3	560808	560852
C237	UNDER DASH-LH-JACOB CLUTCH SW	ITT SS	3	561111	561080
C238	A-C JCT BDI-DODGE CONNECTOR	AMP HML	5	561678	561669
C239	FR SERVICE CPT-HI BUOY VALVE	PED WP	2	561566	561569
C240	FR SERVICE CPT-KNEEL PRO SW	PED WP	2	561566	561569
C241	FR SERVICE CPT-FOG RESISTOR	AMP CPC	3	560847	561862
C242	FR SERVICE CPT-DOOR SW.L.T	PED WP	2	561566	561569
C243	FR SERVICE CPT-HEADLAMPS	TC	3	561871	-------
C244	FR SERVICE CPT-RH FOG LAMP	ITT SS	2	561813	561812
C245	FR SERVICE CPT-RH FOG LAMP	ITT SS	2	561813	561812
C246	FR SERVICE CPT-HARN & DR.L.T	ITT SS	3	561111	561080
C248	FR SERVICE CPT-WIPER PULSE GEN	AMP FF	6	-------	561189
C249	ALARM JCT BDI-CONN.12V TO 5V	AMP HML	3	561667	561550

CONNECTORS CODE ID) Page G-2

No.	LOCATION	#NB TYPE	*PIN CAVITY	*SOCKET HOUSING	HOUSING
C196	RR JCT BDI-CPT.-SPED SIGN.TR	PED WP	2	561566	561569
C198	RR JCT BDI-CPT.-SPD SIGN.W.TR	PED WP	2	561566	561569
C199	RR JCT BDI-CPT.-SPD SIGN.W.T	PED WP	2	561566	561569
C187	RR JCT BDI-RPM RESISTOR CON.	AMP HML	6	561552	561515
C189	ENGINE CPT-PRE-HEAT WATER	AMP CPC	2	561612	561608
C190	ENGINE CPT RH DOOR TAIL L.T	PED WP	2	561566	561569
C191	ENGINE CPT RH DOOR-TAIL L.T	PED WP	2	561566	561569
C192	ENGINE CPT RH DOOR-RH.STOP.L	PED WP	2	561566	561569
C193	ENGINE CPT RH DOOR-RH.STOP.L	PED WP	2	561566	561569
C194	ENGINE CPT RH DOOR-CLOP.L.T	PED WP	2	561566	561569
C195	ENGINE CPT RH DOOR-CLOP.L.T	PED WP	2	561566	561569
C197	ENGINE CPT-I/C COMPRESSOR	PED WP	4	561889	561890
C198	ENGINE CPT-COMPRESSOR	PED WP	4	561889	561890
C199	ENGINE CPT RH DOOR-LICENCE L.T	DOH-AUTO	2	930210	-------
C200	RH-HAT RACK-BALLAST	AMP HML	4	560851	560852
C201	RH-HAT RACK-FLUORESCENT	AMP HML	3	561951	561666
C202	RH-HAT RACK-BALLAST	AMP HML	4	560851	560852
C203	RH-HAT RACK-BALLAST	AMP HML	3	561667	561550
C204	RH-HAT RACK-GENERAL LT	AMP HML	3	561667	561550
C205	RH-HAT RACK-SPEAKER JMP.	AMP HML	5	561661	561662
C206	RH-HAT RACK-READING LT	AMP HML	2	562600	562898
C207	LH-HAT RACK-READING LT	AMP HML	2	562600	562898
C208	LH-HAT RACK-BALLAST	AMP HML	4	560851	560852
C209	LH-HAT RACK-SPEAKER JMP.	AMP HML	5	561661	561662
C211	FR ROOF-STORE LIN	AMP HML	2	562600	562898
C212	FR ROOF-CLEARANCE L.T	AMP HML	2	562600	562898
C213	FR ROOF-CLEARANCE L.T	AMP HML	2	562600	562898
C216	UNDER DASH-LH-P.A.	AMP HML	5	561678	561687
C217	UNDER DASH-LH-P.A.	AMP HML	3	-------	561550
C218	UNDER DASH-LH-P.A.	AMP HML	3	-------	561550
C220	INJECT.BDI-FUEL PRIME PUMP	TC	3	560878	560873
C222	ALARM JCT BDI-CHT-DRYS.SW	HOLEX	4	561477	561476
C223	RH-AXLE-ABS LH SENSOR	W&BCO	3	-------	561550
C224	RH-AXLE-ABS LH SENSOR	W&BCO	2	641132	-------
C225	RH-AXLE-LH WHEEL	W&BCO	3	-------	561550
C226	RH-AXLE-RH WHEEL	W&BCO	3	-------	561550
C227	RH-AXLE-RH WHEEL	W&BCO	2	641132	-------
C228	RH SW.PANEL-HIGRO.OUTLET	HOLEX	4	561477	561476
C229	ENGCPT.-PA RH DOOR	DEUTSCH	2	562486	562475
C230	ENGCPT.-FUEL PRIME PUMP FEED	DEUTSCH	2	562486	562495
C231	ENGCPT.-FUEL PUMP SW.	PED WP	2	561566	561569
C232	ENGCPT.-FUEL PRIME PUMP	PED WP	2	561566	561569
C233	INSTRUMENT PANEL CENTER	HOLEX	4	561477	561476
C234	INSTRUMENT PANEL CENTER	H.DUL.	6	-------	562844
C235	INSTRUMENT PANEL CENTER	H.DUL.	6	-------	562844
C236	INSTRUMENT PANEL CENTER	AMP HML	3	560808	560852
C237	UNDER DASH-LH-JACOB CLUTCH SW	ITT SS	3	561111	561080
C238	A-C JCT BDI-DODGE CONNECTOR	AMP HML	5	561678	561669
C239	FR SERVICE CPT-HI BUOY VALVE	PED WP	2	561566	561569
C240	FR SERVICE CPT-KNEEL PRO SW	PED WP	2	561566	561569
C241	FR SERVICE CPT-FOG RESISTOR	AMP CPC	3	560847	561862
C242	FR SERVICE CPT-DOOR SW.L.T	PED WP	2	561566	561569
C243	FR SERVICE CPT-HEADLAMPS	TC	3	561871	-------
C244	FR SERVICE CPT-RH FOG LAMP	ITT SS	2	561813	561812
C245	FR SERVICE CPT-RH FOG LAMP	ITT SS	2	561813	561812
C246	FR SERVICE CPT-HARN & DR.L.T	ITT SS	3	561111	561080
C248	FR SERVICE CPT-WIPER PULSE GEN	AMP FF	6	-------	561189
C249	ALARM JCT BDI-CONN.12V TO 5V	AMP HML	3	561667	561550

CONNECTORS CODE ID) Page G-3

No.	LOCATION	#NB TYPE	*PIN CAVITY	*SOCKET HOUSING	HOUSING
C250	ALARM JCT BDI-DASH L.TS RELOC.	AMP HML	4	561552	561515
C251	LH SW.PANEL-FAST IDLE	SWF	8	-------	561837
C252	LH SW.PANEL-SWITCH-LT	SWF	2	-------	561837
C253	LH SW.PANEL-ETHER	SWF	8	-------	561087
C254	INST.PANEL RH-ENTRADOOR SW.	TORRY	5	-------	562010
C255	LH SW.PANEL-PRIME PUMP	SWF	8	-------	561087
C257	INSTRUMENT PANEL CENT-SPEEDO	AMP HML	4	560851	560852
C258	LH SW.PANEL-MULTI FUNC. SW	AMP FF	6	-------	561088
C259	LH SW.PANEL-MULTI FUNC. SW	AMP FF	6	-------	561088
C260	UNDER DASH-RH-DOOR HOOLE	AMP HML	4	560851	560852
C261	UNDER DASH-RH-DOOR CLOP.L.T	AMP HML	4	560851	560852
C262	UNDER DASH-RH-DOOR HOOLE	AMP HML	4	560851	560852
C263	UNDER DASH-RH-DOOR CLOP.L.T	AMP HML	4	560851	560852
C264	UNDER DASH-RH-DOOR HOOLE	AMP HML	3	561667	561550
C265	UNDER DASH-RH-DOOR CLOP.L.T	AMP HML	3	561667	561550
C267	UNDER DASH-RH	AMP CPC	24	560642	560643
C268	UNDER DASH-LH-MIRROR	AMP HML	6	561552	561515
C269	UNDER DASH-RH-MIRROR	AMP HML	3	560552	560515
C270	RH-MIRROR POST	HOLEX	6	562878	562869
C271	RH-MIRROR POST	HOLEX	6	562878	562869
C272	LH-MIRROR	SPARTAN	6	990158	-------
C273	RH-MIRROR	SPARTAN	6	990158	-------
C274	RADIO	AMP HML	9	561678	561669
C275	UNDER DASH-RH-DOOR HOOLE	AMP HML	3	561667	561550
C276	UNDER DASH-RH-LOCK SOL.VALVE	AMP HML	2	561248	561247
C280	RH SW.PANEL-HI-DOUT	AMP HML	6	561552	561515
C281	DEPART COMPT.-LTS SW	PED WP	2	561566	561569
C282	LH SW.PANEL-SWITCH-LT	SWF	2	-------	561837
C283	RH SW.PANEL-SWITCH-LT	SWF	2	-------	561837
C292	LH CONSOLE COMPT.-VIDEO SYST.	AMP HML	4	560671	560669
C293	LH CONSOLE-EQUIP.SYS.T.	AMP HML	2	561248	561247
C297	INSTRUMENT PANEL RH-L.TS	AMP HML	2	562600	562898
C362	FR ROOF-LAVATORY OCCUPIED	AMP HML	2	561248	561247
C363	FR ROOF-WATCH YOUR STEP L.T	AMP HML	2	561248	561247
C364	FR ROOF-INVERTER CONT.	AMP HML	5	561661	561662
C365	FR ROOF-UP WINDSHIELD DEFROST	AMP HML	5	561667	561550
C366	FR ROOF-DEST.SIGN FLUOR.	AMP HML	2	562600	562898
C367	FR ROOF-DEST.SIGN FLUOR.	AMP HML	2	562600	562898
C368	FR ROOF-DEST.SIGN BALLAST	AMP HML	3	561667	561550
C369	FR ROOF-DEST.SIGN DRIV.SW	TORRY	1	-------	562018
C370	DDEC ENGINE-ECM POWER CON.	PED WP	5	-------	562345
C371	FR ROOF-DEST.SIGN FLUOR.	AMP HML	2	562600	562898
C372	FR ROOF-DEST.SIGN SPEED SW.	HOLEX	4	561477	561476
C374	ALARM JCT BDI-CONT-MASTER SW	AMP HML	6	561552	561515
C375	ALARM JCT BDI-CONT-LH CONSOL	AMP HML	6	561552	561515
C376	ALARM JCT BDI-CONT-LH CONSOL	AMP HML	3	561667	561550
C377	LH CONSOLE-SW-ENGINE STOP	HOLEX	4	561477	561476
C380	LH CONSOLE-ODM CONNECTOR	DEUTSCH	6	562366	-------
C383	ALARM JCT BDI-CPT.-HIC W WIRE	DEUTSCH	2	562486	562475
C385	FR SERV.COMPT.-UNDERHEATH.WL	AMP HML	9	561667	561662
C386	LH CONSOLE-WCL POWER SYSTEM	SWF	8	-------	561087
C387	RR JCT BDI-WCL	AMP HML	5	561661	561662

CONNECTORS CODE ID) Page G-3

No.	LOCATION	#NB TYPE	*PIN CAVITY	*SOCKET HOUSING	HOUSING
C328	GALLEY-LAMP	AMP HML	2	561248	561247
C329	ENGINE TACHO SIGNAL	PED WP	2	561566	561569
C330	GALLEY HICROWAVE SW.L.T	SWF	2	-------	561837
C331	GALLEY HICROWAVE SW	SWF	8	-------	561087
C332	GALLEY LH CONTAINER SW.L.T	SWF	2	-------	561837
C333	GALLEY RH CONTAINER SW.L.T	SWF	2	-------	561837
C334	GALLEY LH CONTAINER SW	SWF	8	-------	561087
C335	GALLEY LH CONTAINER SW	SWF	8	-------	561837
C336	INSTRUMENT PANEL RH-DEF.SOL	AMP HML	3	561667	561550
C337	INSTRUMENT PANEL-DEFROSTER	SWF	8	-------	561087
C338	INSTRUMENT PANEL-DEFROSTER	SWF	8	-------	561087
C339	INSTR.PANEL LH-UP WASHER SW	SWF	8	-------	561087
C340	INSTR.PANEL-LH-HEAT MIRROR	AMP HML	2	560808	560809
C342	INSTR.PANEL-LH-HEAT MIRROR SW	SWF	8	-------	561087
C343	INSTR.PANEL-LH-HEADLAMP SW	SWF	8	-------	561837
C344	INSTR.PANEL-LH-HAZARD.L.T SW	SWF	8	-------	561087
C345	INSTR.PANEL-LH-FOG L.T SW	SWF	8	-------	561087
C346	INSTR.PANEL-LH-SWITCH LTS	SWF	2	-------	561837
C347	INSTR.PANEL-LH-SWITCH LTS	SWF	8	-------	561087
C348	INSTR.PANEL CENT-HADLO.AMP.HML	3	561667	561550
C349	RH CONSOLE-RED LED HITR	AMP HML	2	561248	561247
C350	RH CONSOLE-THERMOSTAT	AMP HML	5	561667	561550
C351	LH HAT RACK-FLUOR 110V	HOLEX	4	561477	561476
C352	RH CONSOLE-DEM TEMP SENSOR	BURNDY	1	561678	-------
C353	INSTR.PANEL RH-DIM FAN RHEOST	AMP HML	6	561552	561515
C354	INSTR.PANEL RH-DIM TOP LIGHT	AMP HML	6	561552	561515
C355	INSTR.PANEL RH-STOP LTS	AMP HML	3	561667	561550
C356	INSTR.PANEL RH-PARK LTS	AMP HML	3	561667	561550
C357	INSTR.PANEL RH-FUEL LEVEL	AMP HML	3	561667	561550
C358	INSTR.PANEL CENT-TAC.& SPD.L.T	AMP HML	2	562600	562898
C359	INSTR.PANEL CENT-TAC.& SPD.L.T	AMP HML	2	562600	562898
C360	INSTRUMENT PANEL RH-WIPER MOTOR	AMP FF	6	-------	561186
C361	FR ROOF-LAVATORY OCCUPIED L.T	AMP HML	2	561248	561247
C362	FR ROOF-WATCH YOUR STEP L.T	AMP HML	2	561248	561247
C363	FR ROOF-INVERTER CONT.	AMP HML	5	561661	561662
C364	FR ROOF-UP WINDSHIELD DEFROST	AMP HML	3	561667	561550
C365	FR ROOF-DEST.SIGN FLUOR.	AMP HML	2	562600	562898
C366	FR ROOF-DEST.SIGN FLUOR.	AMP HML	2	562600	562898
C367	FR ROOF-DEST.SIGN BALLAST	AMP HML	3	561667	561550
C368	FR ROOF-DEST.SIGN DRIV.SW	TORRY	1	-------	562018
C369	FR ROOF-DEST.SIGN FLUOR.	AMP HML	2	562600	562898
C370	FR ROOF-DEST.SIGN FLUOR.	AMP HML	2	562600	562898
C371	FR ROOF-DEST.SIGN SPEED SW.	HOLEX	4	561477	561476
C373	ALARM JCT BDI-CONT-MASTER SW	AMP HML	6	561552	561515
C374	ALARM JCT BDI-CONT-LH CONSOL	AMP HML	6	561552	561515
C375	ALARM JCT BDI-CONT-LH CONSOL	AMP HML	3	561667	561550
C376	LH CONSOLE-SW-ENGINE STOP	HOLEX	4	561477	561476
C379	LH CONSOLE-OBD CONNECTOR	DEUTSCH	6	562366	-------
C380	ALARM JCT BDI-CPT.-HIC W WIRE	DEUTSCH	2	562486	562475
C382	LH CONSOLE-SW-WINDOW LIFT	SWF	8	-------	561087
C383	LH CONSOLE-SW-DRIVER'S LTS	SWF	2	-------	561837
C384	LH CONSOLE-DRV.WIND.LIFT HOT	PED PO	2	-------	561848
C385	FR SERV.COMPT.-UNDERHEATH.WL	AMP HML	3	561667	561550
C386	LH CONSOLE-WCL POWER SYSTEM	SWF	8	-------	561087
C387	RR JCT BDI-WCL	AMP HML	5	561661	561662

CONNECTORS CODE ID) Page G-2

No.	LOCATION	#NB TYPE	*PIN CAVITY	*SOCKET HOUSING	HOUSING
C389	RR JCT BDI-WCL	AMP HML	12	561735	561734
C389	WCL REAR DOOR	HOLEX	4	561477	561476
C390	LAVATORY WALL-WCL REMOTE CTR	SWF	8	-------	561087
C391	LAVATORY WALL-WCL LAMP	SWF	8	-------	561087
C392	LAVATORY WCL SW.L.T.	SWF	2	-------	561835
C393	LAVATORY WALL-WCL REMOTE S/S.	AMP CPC	4	560686	560687
C394	UNDER INSTRUMENT PANEL-MONITOR	AMP HML	4	560851	560852
C395	DRIVER'S COMPT.-B-U MONITOR	AMP	8	-------	561485
C396	DRIVER'S COMPT.-B-U MONITOR	AMP	8	-------	561485
C397	ENGINE COMPT.-CINDLE ELEC.	PED WP	2	561566	562284
C398	FR SECT.LH-HAT RACK AMPL1

LAZER FORMAT A1 CHELLE 8.2

CONNECTORS CODE ID Page G-1

No.	LOCATION	#ND TYPE	*PIN CAVITY	*SOCKET HOUSING	HOUSING
C1	FR JCT BDI COMPARTMENT	AMP CPC	37	560644	560646
C2	FR JCT BDI COMPARTMENT	AMP CPC	24	560641	560643
C3	FR JCT BDI COMPARTMENT	AMP CPC	37	560714	560713
C4	FR JCT BDI COMPARTMENT	AMP CPC	16	560693	560695
C5	FR SERVICE COMPT.-UNDERHEATH	AMP CPC	37	560644	560646
C6	FR SERVICE COMPT.-UNDERHEATH	AMP CPC	24	560641	560643
C7	FR JCT BDI COMPT.-UNDERHEATH	AMP CPC	37	560714	560716
C8	FR SERVICE COMPT.-UNDERHEATH	AMP CPC	37	560714	560713
C9	ALARM JCT BDI	AMP CPC	37	560644	560646
C10	ALARM JCT BDI	AMP CPC	37	560644	560646
C11	FR SERVICE COMPARTMENT	AMP CPC	24	560642	560643
C12	FR SERVICE COMPARTMENT	AMP CPC	24	560642	560643
C13	LH CONSOLE-HEATER MOR.	AMP HNL	2	561248	561247
C13	FR SERVICE COMPT.	AMP HNL	2	561248	561247
C13	LH CONSOLE-CER.HORROR	AMP HNL	6	561552	561555
C14	UNDER DASH-LH HORROR	AMP HNL	6	561552	561555
C15	RR JCT BDI	AMP CPC	24	561410	561643
C16	LH CONSOLE-CER.HORROR	AMP HNL	6	561552	561555
C16	LH CONSOLE SW-CRUISE ON-OFF	SWF	8	------	561087
C17	LH CONSOLE SW-CRUISE RESUME	SWF	8	------	561087
C18	LH CONSOLE SW-CRUISE SET	SWF	8	------	561087
C20	RR JCT BDI	AMP CPC	37	560644	560646
C21	RR JCT BDI	AMP CPC	24	560641	560643
C26	HYD & HVAC TRANSM.+NEUT.& B-U	PED WP	4	561610	561611
C27	HYD & HVAC TRANSM.-SPEED SENS.	PED WP	2	561566	561569
C30	DDEC ENGINE-ECM	PED	30	------	561600
C35	RR JCT BDI	AMP CPC	24	561642	561643
C36	EMERGENCY-EXIT LTS	AMP HNL	2	561248	561247
C37	RR SECTION-LH HAT RACK	AMP HNL	9	561661	561662
C38	RR SECTION-RH HAT RACK	AMP HNL	9	561661	561662
C40	RR JCT BDI	AMP CPC	16	560639	560640
C41	LAVATORY-ROOF FLUORESCENT	AMP HNL	2	560908	560898
C42	LAVATORY-BACK WALL-WTR TANK	AMP HNL	2	560908	560898
C43	LAVATORY-BACK WALL-ACCESS.	AMP HNL	9	561661	561662
C45	ALARM JCT BDI COMPARTMENT	AMP CPC	24	561642	561643
C46	FR SERVICE COMPT.-LOW BLOC	PED WP	11	561605	561517
C49	WATERE COMPT.-LOW BLOC	AMP HNL	2	561248	561247
C50	FR SERVICE COMPT.-LOW BLOC	PED WP	11	561605	561517
C52	RR JCT BDI	AMP CPC	22	561678	561718
C53	RR JCT BDI	AMP CPC	14	561585	561584
C54	UNDER DASH-LH HALT	HNL	6	561552	561555
C55	UNDER DASH-RH SW PANEL	AMP CPC	9	560636	560637
C56	UNDER DASH-RH CONSOLE	AMP CPC	24	561642	561643
C57	UNDER DASH-RH ACCESSORIES	AMP CPC	22	561678	561718
C58	UNDER DASH-RH ACCESSORIES	AMP CPC	22	561678	561718
C59	EVAPORATOR COMPARTMENT	AMP HNL	2	561248	561247
C60	RR JCT BDI COMPT.-L/T	AMP HNL	2	561248	561247
C61	LUGGAGE COMPARTMENT LTS	AMP HNL	2	561248	561247
C62	LUGGAGE COMPARTMENT LTS	AMP HNL	2	561248	561247
C63	LUGGAGE COMPARTMENT LTS	AMP HNL	2	561248	561247
C64	LUGGAGE COMPARTMENT LTS	AMP HNL	2	561248	561247
C65	LUGGAGE COMPARTMENT LTS	AMP HNL	2	561248	561247

CONNECTORS CODE ID Page G-1

No.	LOCATION	#ND TYPE	*PIN CAVITY	*SOCKET HOUSING	HOUSING
C66	LUGGAGE COMPARTMENT LTS	AMP HNL	2	561248	561247
C67	LUGGAGE COMPARTMENT LTS	AMP HNL	2	561248	561247
C68	LUGGAGE COMPARTMENT LTS	AMP HNL	2	561248	561247
C69	RH AVLE ACC-DISPOSE PVC END	PED WP	6	561568	561578
C70	ALARM JCT BDI COMPARTMENT	AMP CPC	14	561642	561643
C71	UNDER INSTRUMENT PANEL-LH	AMP CPC	37	561645	561646
C72	UNDER INSTRUMENT PANEL-CENT.	AMP CPC	37	561645	561646
C73	UNDER INSTRUMENT PANEL-CENT.	AMP CPC	16	560639	560640
C74	LUGGAGE COMPT.-AIR RET.SENS.	AMP HNL	2	561248	561247
C75	ALARM JCT BDI COMPARTMENT	PED WP	4	561610	561611
C76	LUGGAGE COMPT.-AIR RET.SENS.	AMP HNL	2	561248	561247
C77	LUGGAGE COMPT.-AIR RET.SENS.	AMP HNL	2	561248	561247
C78	FR JCT BDI COMPARTMENT	AMP CPC	22	561678	561718
C79	FR SERVICE COMPT.-UNDERHEATH	AMP CPC	37	560644	560646
C80	LUGGAGE COMPT.-AIR RET.SENS.	AMP HNL	2	561248	561247
C81	PASSENGER COMPT.-HOLE L/T	AMP HNL	6	560908	560898
C82	ENTRANCE DOOR	HOLEX	6	562079	562069
C83	ENTRANCE DOOR-MIDSHIFT HOLE	HOLEX	6	562079	561476
C84	ENTRANCE DOOR-PRESSURE SW	PED WP	2	561566	561569
C85	UNDER INSTRUMENT PANEL-LH	AMP HTA-100 B	8	------	562248
C87	RR JCT BDI	AMP CPC	9	560636	560637
C88	RR END ROOF-CLEARANCE LTS	AMP HNL	2	560908	560898
C89	RR END ROOF-B-U HOINTER	AMP CPC	14	561582	561581
C90	RR JCT BDI	AMP CPC	15	561587	561586
C91	RR JCT BDI	AMP CPC	37	561566	561569
C92	RR JCT BDI COMPT.-WATI SKID	AMP CPC	9	561635	561637
C93	RR JCT BDI COMPT.-WATI SKID	AMP CPC	9	561635	561637
C94	FR AVLE ACCESSORIES	AMP CPC	14	561585	561585
C97	RH AVLE ACC-DISPOS PVC END	PED WP	6	561568	561578
C98	FR SERVICE COMPT.-ELC.F.SPEDAL	PED WP	3	561782	561781
C99	FR SERVICE COMPT.LTS	AMP HNL	2	561248	561247
C100	FR SERVICE COMPT.-CONDENSER	AMP HNL	2	561248	561247
C101	FR SERVICE COMPT.-ELEC.-HORNS	PED WP	2	561566	561569
C102	FR SERVICE COMPT.-F.I.-GEN.L.T	HNL	9	561661	561662
C103	FR SW & SERV.ELC.COMPT.-HARNESS	ITT SS	2	561813	561812
C104	FR SERVICE COMPT.-CIGL.& WLHT	PED WP	2	561566	561569
C105	FR SERVICE COMPT.-WATER VALVE	PED WP	2	561566	561569
C106	FR SERVICE COMPT.-CHMPER	PED WP	2	561566	561569
C107	FR SERVICE COMPT.-KNEEL.SYS	PED WP	2	561566	561569
C108	FR SERVICE COMPT.-KNEEL.SYS	PED WP	2	561566	561569
C109	FR SERVICE COMPT.-KNEEL.SYS	PED WP	2	561566	561569
C110	EVAPORATOR COMPT.-DAMPER	ITT SS	2	561813	561812
C113	BATT.& RH J&JCPT.MARKER.L.T	ITT SS	2	561813	561812
C114	BATTERY CPT.-DOOR SW.L.T RH	ITT SS	2	561813	561812
C115	ENGINE COMPT.-LTS	PED WP	2	561566	561569
C116	ENGINE COMPT.-LAVATORY FAN	TC	2	561268	562997
C117	UNDER DASH-RH WIPER MOTOR	AMP FF	6	------	561186
C118	UNDER DASH-RH L/H FAN	TC	2	561268	562997
C119	UNDER DASH-RH RH FAN	TC	2	561268	562997
C120	RR JCT BDI-COOLER CONNECTOR	AMP HNL	2	561248	561247
C121	RR JCT BDI COMPT.-AT KYH	AMP CPC	16	560639	560640
C122	RR JCT BDI COMPT.-AT KYH	AMP CPC	16	560639	560640
C124	FR SERVICE COMPT.-KNEELING	ITT SS	3	561811	561880
C125	RR JCT BDI COMPT.-AT KYH	PED	30	------	561600

CONNECTORS CODE ID Page G-2

No.	LOCATION	#ND TYPE	*PIN CAVITY	*SOCKET HOUSING	HOUSING
C125	ENGINE COMPT-BU-U.ALARM	PED WP	2	561566	561569
C126	ENGINE COMPT-FLUSHING PUMP	PED WP	2	561566	561569
C127	ENGINE COMPT-FUEL FILTER	PED WP	2	561566	561569
C128	ENGINE COMPT-U-C COMPRES.LUTION	ITT SS	2	561813	561812
C129	ENGINE COMPT-FUEL PUMP	PED WP	2	561566	561569
C130	ENGINE COMPT-UN.DOOR	ITT SS	2	561813	561812
C131	ENGINE COMPT-UN.DOOR	ITT SS	2	561813	561812
C132	ENGINE COMPT-W/C L.O.PRESS SW	PED WP	2	561566	561569
C133	ENGINE COMPT-W/C L.O.PRESS SW	PED WP	2	561566	561569
C134	ALARM JCT BDI COMPARTMENT	PED WP	4	561610	561611
C136	FR JCT BDI-LUGGAGE DOOR CON.	AMP HNL	15	561587	561586
C137	RR JCT BDI	AMP CPC	37	561566	561569
C138	W/C JCT BDI-TRANSMITTER	AMP HNL	2	560908	560898
C139	W/C JCT BDI-CONTROL MODULE	AMP HNL	2	560908	560898
C139	W/C JCT BDI-L-DOOC MODULE	AMP HOP	15	562811	------
C142	LAVATORY-DOOR WALL	AMP HNL	2	561248	561247
C143	LAVATORY-DOOR WALL	AMP HNL	3	560908	562086
C144	ENGINE CPT-RH-DIFF.PRESS.SW	PED WP	2	561566	561569
C200	RH SECT.-RH HAT RACK-BALLAST	AMP HNL	9	561661	561662
C201	ENGINE CPT-MODULATOR VALVE	AMPHENOL	2	------	561412
C202	RH SECT.-RH HAT RACK SPEAKER	AMP HNL	9	561661	561662
C203	RH HAT RACK-READING L.T	AMP HNL	2	561248	561247
C204	RH HAT RACK-GENERAL L.T	AMP HNL	9	561661	561662
C205	RH SECT.-RH HAT RACK SPEAKER	AMP HNL	9	561661	561662
C206	RH HAT RACK-READING L.T	AMP HNL	2	560908	560898
C207	RH HAT RACK-READING L.T	AMP HNL	2	560908	560898
C208	LH HAT RACK-BALLAST	AMP HNL	4	560951	560952
C209	RH SECT.-LH HAT RACK SPEAKER	AMP HNL	9	561661	561662
C211	EVAPORATOR-CPT-FRESH AIR SENS	ITT SS	2	561813	561812
C212	EVAPORATOR-CPT-FRESH AIR SENS	ITT SS	2	561813	561812
C213	FR ROOF-CLEARANCE L.T	AMP HNL	2	560908	560898
C216	UNDER DASH-LH-P.A.	AMP HNL	9	561678	561678
C217	UNDER DASH-LH-P.A.	AMP HNL	3	------	561558
C218	UNDER DASH-LH-P.A.	AMP HNL	3	------	561558
C219	UNDER DASH-LH-P.A.	AMP HNL	3	------	561558
C220	RR JCT BDI-FUEL PRIME PUMP	TC	1	561818	561873
C222	ALARM JCT BDI COMPT.-AT KYH	AMP CPC	14	561677	561678
C223	RH AVLE-LH-DIST-TACHO	AMP HNL	4	561551	561661
C224	ENGINE CPT-FUEL PRIME PUMP	PED WP	2	561566	561569
C227	RH AVLE-RH-LH WHEEL	W48CD	3	------	641098
C228	RH SW PANEL-HIGRO OUTLET	HOLEX	4	561477	561476
C229	RH AVLE-LH-DIST-DRIV.SPEAK.	AMP HNL	4	561551	561661
C230	ENGOPT.-FUEL PRIME PUMP FEED	DEUTSCH	2	562495	562495
C231	RH AVLE-RH-LH WHEEL	W48CD	3	------	641098
C232	ENGOPT.-FUEL PRIME PUMP	PED WP	2	561566	561569
C233	INSTRUMENT PANEL CENTER	AMP HNL	2	561248	561247
C234	INSTRUMENT PANEL CENTER	VJOL	6	------	562844
C235	INSTRUMENT PANEL CENTER	VJOL	6	------	562844
C236	INSTRUMENT PANEL CENTER	AMP HNL	4	560951	560952
C237	UNDER DASH-LH-JACOB CLUTCH SW	ITT SS	3	561111	561880
C238	W/C JCT BDI-DDEC CONNECTOR	AMP HNL	9	561678	561678
C239	FR SERVICE CPT-HI BUZZ VALVE	PED WP	2	561566	561569
C240	FR SERVICE CPT-KNEEL PRSD SW	PED WP	2	561566	561569
C241	FR SERVICE CPT-FOG RESISTOR	AMP CPC	3	561847	561862
C242	FR SERVICE CPT-FOG RESISTOR	AMP CPC	3	561847	561862
C243	FR SERVICE CPT-HEADLAMPS	TC	1	------	561871
C244	FR SERVICE CPT-HI-FOG LAMP	ITT SS	2	561813	561812
C245	FR SERVICE CPT-HI-FOG LAMP	ITT SS	2	561813	561812
C246	FR SERVICE CPT-HARN & DRL'S	ITT SS	3	561111	561880
C248	ALARM JCT BDI-WIPER PULSE DEV	AMP FF	6	------	561189
C249	ALARM JCT BDI-CONN.12V TO 5V	AMP HNL	3	561667	561550

CONNECTORS CODE ID Page G-3

No.	LOCATION	#ND TYPE	*PIN CAVITY	*SOCKET HOUSING	HOUSING
C250	ALARM JCT BDI-DASH LTS REGUL.	AMP HNL	4	561952	561515
C251	LH SW PANEL-F.VENT IDLE	SWF	8	------	561837
C252	LH SW PANEL-SWITCH L.T	SWF	2	------	561837
C253	LH SW PANEL-ETHER	SWF	2	------	561837
C254	INST. PANEL-RH ENTR.DOOR SW. TORR1	5	------	562108
C255	LH SW PANEL-SPEED SW	SWF	8	------	561837
C257	INSTRUMENT PANEL CENT-SPEEDO	AMP HNL	4	560951	560952
C258	LH SW PANEL-MULTI FUNC. SW	AMP FF	8	------	561188
C259	LH SW PANEL-MULTI FUNC. SW	AMP FF	6	------	561188
C260	LH SW PANEL-MULTI FUNC. SW	AMP FF	6	------	561188
C264	UNDER DASH-RH DOOR CIR.L.T	AMP HNL	4	561551	561668
C265	UNDER DASH-RH DOOR CIR.L.T	AMP HNL	4	561551	561668
C266	UNDER DASH-RH DOOR CIR.L.T	AMP HNL	4	561551	561668
C267	ENGINE CPT-U-C COMPRESSOR	AMP HNL	4	561889	561892
C268	ENGINE CPT-U-C COMPRESSOR	AMP HNL	4	561889	561892
C269	ENGINE CPT RR DOOR LICENCE L.T	DOH-AUTO	2	930210	------
C270	RH SW PANEL-RADIO	AMP HNL	4	561551	561668
C271	RH HAT RACK-FLUORESCENT	AMP HNL	4	561551	561668
C272	RH HAT RACK-BALLAST	AMP HNL	4	561551	561668
C273	RH HAT RACK-BALLAST	AMP HNL	4	561551	561668
C274	RH HAT RACK-GENERAL L.T	AMP HNL	4	561667	561550
C275	RH SECT.-RH HAT RACK SPEAKER	AMP HNL	4	561551	561668
C276	RH HAT RACK-READING L.T	AMP HNL	2	560908	560898
C277	RH HAT RACK-READING L.T	AMP HNL	2	560908	560898
C278	LH HAT RACK-BALLAST	AMP HNL	4	560951	560952
C279	RH SECT.-LH HAT RACK SPEAKER	AMP HNL	4	561551	561668
C280	LH SW PANEL-SWITCH L.T	AMP HNL	2	561248	561247
C281	LH SW PANEL-SWITCH L.T	AMP HNL	2	561248	561247
C282	LH CONSOLE COMPT-VIDEO SYST.	AMP HNL	4	561671	561668
C283	LH CONSOLE COMPT-VIDEO SYST.	AMP HNL	4	561671	561668
C284	INSTRUMENT PANEL RH -LTS	AMP HNL	2	560908	560898
C285	LH DASH-CONTROL-SWITCH L.T	AMP HNL	3	561667	561558
C299	LH CONSOLE SW-GALLEY	SWF	8	------	561087
C300	INVERTER-CENTER	AMP HNL	4	561551	561668
C301	INSTRUMENT PANEL CENT-TACHO	AMP HNL	4	560951	560952
C302	LH CONSOLE SW-GALLEY	AMP HNL	9	561661	561662
C305	GALLEY	AMP HNL	9	561661	561662
C306	LH CONSOLE SW-PHEDISTAL	SWF	8	------	561087
C309	DDEC ENGINE-ECM POWER CON.	PED HP	5	------	562345
C310	LH CONSOLE SW-CIGL.& WLHT	SWF	8	------	561087
C311	LH CONSOLE SW-HDS & PAS CHME	SWF	8	------	561087
C312	LH CONSOLE SW-WIPER	SWF	8	------	561087
C313	LH CONSOLE SW-CEN & FLOOR LTS	SWF	8	------	561087
C314	LH CONSOLE SW-CEN & FLOOR LTS	SWF	8	------	561087
C315	LH CONSOLE SW-SWITCH	SWF	8	------	561087
C316	LH CONSOLE SW-SWITCH	SWF	8	------	561087
C318	LH CONSOLE SW-DRIV WINDOW LIFT	SWF	8	------	561087
C320	LH CONSOLE SW-DRIVER'S LTS	SWF	8	------	561087
C321	LH CONSOLE-DRV WIND LIFT HOT.	PED PO	2	------	561848
C322	LH CONSOLE SW-DAWN,WIND.WIPER	SWF	8	------	561087
C324	GALLEY-REFRIGERATOR	AMP HNL	9	561661	561662
C325	LH CONSOLE SW-WIPER	SWF	8	------	561087
C326	LH CONSOLE SW-SPARE	SWF	8	------	561087
C327	ENGINE COMPT-MR-START SW BDY	AMP CPC	9	560636	560637

CONNECTORS CODE ID Page G-3

No.	LOCATION	#ND TYPE	*PIN CAVITY	*SOCKET HOUSING	HOUSING
C328	GALLEY-LAMP	AMP HNL	2	561248	561247
C329	ENGINE TACHO SIGNAL	PED WP	2	561566	561569
C330	GALLEY-MICROWAVE SW.L.T	SWF	2	------	561837
C331	GALLEY-MICROWAVE SW	SWF	2	------	561837
C332	GALLEY-RH CONTAINER SW.L.T	SWF	2	------	561837
C333	GALLEY-RH CONTAINER SW	SWF	2	------	561837
C334	GALLEY-LH CONTAINER SW	SWF	2	------	561837
C335	GALLEY-LH CONTAINER SW.L.T	SWF	2	------	561837
C337	INSTR.PANEL-LH-UP WIPER SW	SWF	8	------	561087
C338	INSTR.PANEL-LH-WASHER SW	SWF	8	------	561087
C339	INSTR.PANEL-LH-WASHER SW.L	SWF	2	------	561837
C340	ALARM JCT BDI-COMP.	AMP HNL	2	560908	560898
C341	INSTR.PANEL-LH-HORNS SW	SWF	8	------	561087
C342	INSTR.PANEL-LH-HEADLAMP SW	SWF	8	------	561087
C343	INSTR.PANEL-LH-HORNS,L.T SW	SWF	8	------	561087
C344	INSTR.PANEL-LH-F.IDLE SW	SWF	8	------	561087
C345	INSTR.PANEL-LH-HORNS SW	SWF	2	------	561837
C346	INSTR.PANEL-LH-DASHLT SW	SWF	2	------	561837
C347	LH CONSOLE-RADIO-SPEAKER	AMP HNL	9	561661	561662
C348	RH CONSOLE-RELEVISEUR	AMP HNL	2	561248	561247
C350	RH CONSOLE-THERMOMETER	AMP HNL	3	561667	561550
C351	LH HAT RACK-FLUOR.CIR.	HOLEX	4	561477	561476
C352	RH CONSOLE-CRY TEMP SENSOR	BURNDY	4	561184	------
C353	INSTR.PANEL RH-DRV FAN RHEOST	AMP HNL	5	561552	561555
C354	INSTR.PANEL RH-DRV TEMP CTR	AMP HNL	6	561552	561555
C355	INSTR.PANEL RH-FRT DEFR CTR	AMP HNL	5	561667	561558
C357	INSTR.PANEL RH-WATER TEMP SW	AMP HNL	3	561667	561558
C358	INSTR.PANEL RH-DRV FAN SW	AMP HNL	3	561667	561558
C359	INSTR.PANEL CENT-FAC & SPEL	AMP HNL	2	561248	561247
C360	RH ROOF-WIPER MOTOR	AMP FF	6	------	561186
C361	RH ROOF-WIPER OCCUPIED SW	AMP HNL	2	561248	561247
C362	RH ROOF-WATCH-YOUR STEP L.T	AMP HNL	2	561248	561247
C364	RH ROOF-DOOR-STRATOS SW	AMP HNL	3	561667	561558
C365	RH ROOF-UP WINDSHIELD DEFROST	AMP HNL	3	561667	561558
C366	RH CONSOLE-TRANSMITTER	AMP HNL	3	561667	561558
C367	RH CONSOLE-DSP.CTL.T SENSOR	PED WP	2	561566	561569
C368	RH CONSOLE-DSP.CTL.T SENSOR	PED WP	2	561566	561569
C369	RH ROOF-DEST.SIGN OPER. TORR1	4	------	562108
C370	RH ROOF-DEST.SIGN FLUOR.	AMP HNL	2	560908	560898
C371	RH ROOF-DEST.SIGN FLUOR.	AMP HNL	2	560908	560898
C372	RH ROOF-DEST.SIGN SPEED SW	HOLEX	4	561477	561476
C374	ALARM JCT BDI COMPT-MASTER SW	AMP HNL	6	561552	561555
C375	ALARM JCT BDI COMPT-LH CONSOL	AMP HNL	6	561552	561555
C376	ALARM JCT BDI COMPT-LH CONS.	AMP CPC	37	561714	561205
C377	LH SW PANEL-STOP ENGOPERDE	SWF	8	------	561087
C378	LH SW PANEL-STOP ENGOPERDE	SWF	2	------	561837
C379	ALARM JCT BDI-MIC W/ SWITCH	DEUTSCH	2	562248	562247
C380	FR SERVICE COMPT-UNDERHEATH	AMP HNL	9	561661	561662
C381	LH CONSOLE-W/C POWER SYSTEM	SWF	8	------	561087
C387	RR JCT BDI -W/C	AMP HNL	9	561661	561662

CONNECTORS CODE ID Page G-2

No.	LOCATION	#ND TYPE	*PIN CAVITY	*SOCKET HOUSING	HOUSING
C388	RR JCT BDI-W/C	AMP HNL	12	561735	561734
C389	W/C REAR DOOR	HOLEX	4	561477	561476
C390	LAVATORY WALL-W/C REMOTE CTR	SWF	8	------	561087
C391	LAVATORY WALL-W/C LAMP	SWF	8	------	561087
C392	LAVATORY-W/C WL SW.L.T.	SWF	2	------	561837
C393	LAVATORY WALL-W/C REMOTE STS.	AMP CPC	4	561686	561687
C394	UNDER INSTRUMENT PANEL-LH	AMP HNL	4	560951	560952
C395	DRIVER'S COMPT.-B-U MONITOR	AMP	5	------	561465
C396	FR SERVICE COMPT.-ENGINE	DEUTSCH	2	562495	562495
C397	ENGINE COMPT.-CINDLL.ALC	DEUTSCH	2	562495	562284
C398	FR SECT.-LH HAT RACK-AMPL1	HOLEX	6	------	562464
C399	FR SECT.-LH HAT RACK-AMPL1	HOLEX	6	------	562464
C400	ENGINE COMPT.-BLOCK HEATER	PED HP	3	561781	561782
C401	FR SECT.-LH HAT RACK-AMPL1	HOLEX	6	------	562464
C402	RR DRIVE AXLE-AIR DRYER	PED HP	2	------	562251
C403	CALLEY-FWD.HOOD	AMP HNL	2	562248	561247
C406	FR JCT BDI COMPT.-WATI SKID	AMP HNL	2	560908	560898
C407	FR SERVICE COMPT.	AMP HNL	2	561248	561247
C408	ENGINE COMPT.-SIGNAL	PED HP	4	561606	561607
C409	ENGINE CPT.-LOW COOL.LEVEL	PED HP	2	562358	------
C410	FR JCT BDI-DDDE CONNECTOR	AMP HNL	15	561587	561586
C411	FR JCT BDI-DDDE CONNECTOR	AMP HNL	15	561587	561586
C412	LH SW.PANEL-MASTER SWITCH	SWF	8	------	561087
C413	ENG.CPT-U-C HE UNLOAD.RYS SW	PED WP	2	561566	561569
C414	FR JCT BDI	AMP CPC	14	561678	561649
C415	ENGINE CPNDLE-FAN SIGNAL	PED WP	3	561781	561782
C416	ENGINE CPT-FAN SIGNAL	PED WP	3	561781	561782
C417	FRONT JCT BDI-DDDE	AMP HNL	15	561587	561586
C418	INSTR.PANEL LH-HTR WINDSHIELD	SWF	8	------	561087
C419	FR JCT BDI-DDDE CONN.FOR JACOB	AMP HNL	3	561667	561558
C420	ENGINE COMPT.-WEBASTO WATER HTR	TC	2	561597	------
C421	ENGINE COMPT.-WEBASTO WATER HTR	TC	1	561873	------
C422	ENGINE COMPT.-WEBASTO WATER HTR	TC	2	561597	------
C423	UNDER DASH-CENTER-AMP.HNL	3	561667	561558
C425	ALARM JCT BDI-DIODES	AMP HNL	15	561587	561586
C426	ALARM JCT BDI-DIODES	AMP HNL	15	561587	561586
C427	ALARM JCT BDI-DIODES	AMP HNL	6	561552	561555
C430	ALARM JCT BDI COMPT.-TIMER	AMP FF	8	561188	561363
C431	ALARM JCT BDI-DIODES-REL.TAB	AMP HNL	2	561248	561247
C432	ENGINE CPT.-PROV.SW.DOOR AJAR	DEUTSCH	4	562479	562477
C433	FRONT JCT.BDI-DIODES	AMP HNL	15	561587	561586
C434	FRONT JCT.BDI-DIODES	AMP HNL	15	561587	561586
C435	FR SERVICE CPT.-RH KNEEL.PRSD SW	PED WP	2	560908	560898
C436	RH HAT RACK-W/C CENTER ROOF.AC	AMP CPC	16	560639	560640
C437	RH HAT RACK-W/C CENTER ROOF.AC	AMP CPC	16	560639	560640
C450	WORLD TRANSM.-TURBINE SENSOR	PED HP	2	------	562431
C457	WORLD TRANSM.-MAIN CONNECTOR	DEUTSCH	31	562572	562536
C458	WORLD TRANSM.-TURBINE SENSOR	PED HP	2	------	562426
C459	WORLD TRANSM.-ENGINE SPS.SENS.	PED HP	2	------	562426
C460	WORLD TRANSM.-SPEED SENSOR	ITT	2	------	562541
C461	WORLD TRANSM.-RETARDER TEMP.	PED HP	2	561566	561569
C462	WORLD TRANSM.-SOL.VALVE	PED HP	2	------	562432
C463	WORLD TRANSM.-SENSOR CONN.	DEUTSCH	36	562578	562573
C464	RR JCT BDI-ODL CONN w.C.	PED HP	12	------	562574

CONNECTORS CODE ID Page G-2

No.	LOCATION	#ND TYPE	*PIN CAVITY	*SOCKET HOUSING	HOUSING
C465	LH CONSOLE-SHIFTER SELECTOR	T & BET	18	------	562429
C466	FR SERVICE CPT.-RESIS.HOO.	PED WP	3	------	562428
C467	FR SERVICE CPT.-RESIS.HOO.	PED WP	3	------	562428
C468	FRONT JCT.BDI-W/C SW.L.T.	PED HP	1	------	562873
C470	FR SERVICE CPT.-SILENT 1000	AMP HNL	2	561248	561247
C471	FR SERVICE CPT.-SILENT 1000	AMP HNL	2	561248	561247
C472	FR SERVICE CPT.-SILENT 1000	PED HP	2	561566	561569
C473	ENGINE CPT.-PROV.SW.DOOR AJAR	DEUTSCH	4	562479	562477
C474	ALARM JCT BDI-PROPEVER	HOLEX	6	561678	562069
C501	LH CONSOLE-PROPEVER HOLDER	PED HP	3	562433	------
C502	LH CONSOLE-PRE HEATER SW.	SWF	8	------	561087
C503	LH CONSOLE-PRE HEATER SW.	SWF	8	------	561087
C504	ALARM JCT BDI COMPT.-WELTEMP	AMP	8	561688	562363
C505	ALARM JCT BDI COMPT.&TRAM TIMER AMP		3	------	562934
C506	AL

LAZER FORMAT TA CHELLE 8.2

CONNECTORS CODE ID Page G-1

No.	LOCATION	#ND TYPE	*PIN CAVITY	*SOCKET HOUSING	HOUSING
C1	FR JCT BDI COMPARTMENT	AMP CPC	37	560644	560646
C2	FR JCT BDI COMPARTMENT	AMP CPC	24	560641	560643
C3	FR JCT BDI COMPARTMENT	AMP CPC	37	560714	560713
C4	FR JCT BDI COMPARTMENT	AMP CPC	16	560493	560495
C5	FR SERVICE COMPT.-UNDERHEATH	AMP CPC	37	560644	560646
C6	FR SERVICE COMPT.-UNDERHEATH	AMP CPC	24	560641	560643
C7	FR JCT BDI COMPT.-UNDERHEATH	AMP CPC	37	560714	560766
C8	FR SERVICE COMPT.-UNDERHEATH	AMP CPC	37	560714	560713
C9	ALARM JCT BDI	AMP CPC	37	560644	560646
C10	ALARM JCT BDI	AMP CPC	37	560644	560646
C11	FR SERVICE COMPARTMENT	AMP CPC	24	560642	560643
C12	FR SERVICE COMPARTMENT	AMP CPC	24	560642	560643
C13	LH CONSOLE-HEATER MOR.	AMP HNL	2	561248	562247
C13	FR SERVICE COMPT.	AMP HNL	3	560562	560565
C13	LH CONSOLE-CTR HORROR	AMP HNL	6	561552	561555
C14	UNDER DASH-LH HORROR	AMP HNL	6	561552	561555
C15	RR JCT BDI	AMP CPC	24	560640	560643
C16	UNDER DASH-RH HORROR	AMP HNL	6	561552	561555
C16	LH CONSOLE SW-CRUISE ON-OFF	SWF	8	------	561087
C17	LH CONSOLE SW-CRUISE RESUME	SWF	8	------	561087
C18	LH CONSOLE SW-CRUISE SET	SWF	8	------	561087
C20	RR JCT BDI	AMP CPC	37	560644	560646
C21	RR JCT BDI	AMP CPC	24	560641	560643
C26	HYD & HAN TRANSM.-NEUT.& B-U	PED WP	4	561610	561611
C27	HYD & HAN TRANSM.-SPEED SENS.	PED WP	2	561566	561569
C30	DDEC ENGINE-ECM	PED	30	------	561600
C35	RR JCT BDI	AMP CPC	24	560642	560643
C36	EMERGENCY-EXIT LTS	AMP HNL	2	560800	560898
C37	RR SECTION-LH HAT RACK	AMP HNL	9	560661	561662
C38	RR SECTION-RH HAT RACK	AMP HNL	9	560661	561662
C40	RR JCT BDI	AMP CPC	16	560493	560494
C41	LAVATORY-ROOF FLOORS CONT.	AMP HNL	2	560800	560898
C42	LAVATORY-BACK WALL-WTR TANK	AMP HNL	2	560800	560898
C43	LAVATORY-BACK WALL-ACCESS.	AMP HNL	9	560661	561662
C45	ALARM JCT BDI COMPARTMENT	AMP CPC	24	560642	560643
C46	FR SERVICE COMPT.-UNDERHEATH	AMP CPC	37	560714	560713
C49	BATTERY COMPT.-LOW BLOCK	AMP HNL	2	560800	560898
C50	FR SERVICE COMPT.-LOW BLOCK	PED WP	11	560585	561157
C52	RR JCT BDI	AMP CPC	22	560718	560719
C53	RR JCT BDI	AMP CPC	14	560585	560584
C54	UNDER DASH-LH UNIT	HNL	6	561552	561555
C55	UNDER DASH-RH SW PANEL	AMP CPC	9	560636	560637
C56	UNDER DASH-RH CONSOLE	AMP CPC	24	560642	560643
C57	UNDER DASH-RH ACCESSORIES	AMP CPC	22	560695	560718
C58	UNDER DASH-RH ACCESSORIES	AMP CPC	22	560695	560718
C59	EVAPORATOR COMPARTMENT	AMP HNL	2	560800	560898
C60	RR JCT BDI COMPT.-L/T	AMP HNL	2	561248	562247
C61	LUGGAGE COMPARTMENT LTS	AMP HNL	2	561248	562247
C62	LUGGAGE COMPARTMENT LTS	AMP HNL	2	561248	562247
C63	LUGGAGE COMPARTMENT LTS	AMP HNL	2	561248	562247
C64	LUGGAGE COMPARTMENT LTS	AMP HNL	2	561248	562247
C65	LUGGAGE COMPARTMENT LTS	AMP HNL	2	561248	562247

CONNECTORS CODE ID Page G-1

No.	LOCATION	#ND TYPE	*PIN CAVITY	*SOCKET HOUSING	HOUSING
C66	LUGGAGE COMPARTMENT LTS	AMP HNL	2	561248	562247
C67	LUGGAGE COMPARTMENT LTS	AMP HNL	2	561248	562247
C68	LUGGAGE COMPARTMENT LTS	AMP HNL	2	561248	562247
C69	RH AXLE ACC-DISPOSE PVC END	PED WP	6	561568	561578
C70	ALARM JCT BDI COMPARTMENT	AMP CPC	24	560642	560643
C71	UNDER INSTRUMENT PANEL-LH	AMP CPC	37	560645	560646
C72	UNDER INSTRUMENT PANEL-CENT.	AMP CPC	37	560645	560646
C73	UNDER INSTRUMENT PANEL-CENT.	AMP CPC	16	560639	560640
C74	ALARM JCT BDI COMPARTMENT	AMP CPC	24	560642	560643
C75	ALARM JCT BDI COMPARTMENT	PED WP	4	561610	561611
C76	LUGGAGE COMPT.-AIR RET.SENS.	AMP HNL	2	561248	562247
C77	LUGGAGE COMPT.-AIR RET.SENS.	AMP HNL	2	561248	562247
C78	FR JCT BDI COMPARTMENT	AMP CPC	22	561791	561718
C79	FR SERVICE COMPT.-UNDERHEATH	AMP CPC	37	560644	560646
C80	LUGGAGE COMPT.-AIR RET.SENS.	AMP HNL	2	561248	562247
C81	PASSENGER COMPT.-HOLE L/T	HNL	6	562078	562069
C82	ENTRANCE DOOR	HOLEX	6	562078	562069
C83	ENTRANCE DOOR-PRESSURE SW.	PED WP	2	561566	561569
C84	ENTRANCE DOOR-PRESSURE SW.	PED WP	2	561566	561569
C85	UNDER INSTRUMENT PANEL-LH	AMP HTA-100	B	------	562248
C87	RR SWITL & RR JUSCPT-DRIVER	AMP CPC	9	560636	560637
C88	RR END ROOF-CLEARANCE LTS	AMP HNL	2	560800	560898
C89	RR END ROOF-B-U HONITOR	AMP CPC	14	560582	560581
C90	RR JCT BDI	AMP CPC	15	561787	561786
C91	RR JCT BDI	AMP CPC	37	560566	560569
C92	RR JCT BDI COMPT.-WATI SKID	AMP CPC	9	560635	560637
C93	RR JCT BDI COMPT.-WATI SKID	AMP CPC	9	560635	560637
C94	FR AXLE-ACCESSORIES	AMP CPC	14	560585	560581
C97	RH AXLE ACC-DISPOS PVC END	PED WP	6	561568	561578
C98	FR SERVICE COMPT.-ELC.F.SPEDAL	PED WP	3	561782	561781
C99	FR SERVICE COMPT.-LTS	AMP HNL	2	562248	562247
C100	FR SERVICE COMPT.-CONNECTING	AMP HNL	2	560800	560898
C101	FR SERVICE COMPT.-ELEC.-HORNS	PED WP	2	561566	561569
C102	FR SERV.-WATER-LEVEL-SENS.	HNL	9	560661	561662
C103	FR SERV.& SERV.COMPT.-WIPERS	ITT SS	2	561813	561812
C104	FR SERVICE COMPT.-CLS.& WLKT.	PED WP	2	561566	561569
C105	FR SERVICE COMPT.-CLS.& WLKT.	PED WP	2	561566	561569
C106	FR SERVICE COMPT.-WATER VALVE	PED WP	2	561566	561569
C107	FR SERVICE COMPT.-DUMPER	PED WP	2	561566	561569
C108	FR SERVICE COMPT.-KNEEL.SYS	PED WP	2	561566	561569
C109	FR SERVICE COMPT.-KNEEL.SYS	PED WP	2	561566	561569
C110	FR SERVICE COMPT.-KNEEL.SYS	PED WP	2	561566	561569
C111	EVAPORATOR COMPT.-DAMPER	ITT SS	2	561813	561812
C113	BATT.& RR JUSCPT.-MARKER L/T	ITT SS	2	561813	561812
C114	BATT.& RR JUSCPT.-MARKER L/T	ITT SS	2	561813	561812
C115	ENGINE COMPT.-LTS	PED WP	2	561566	561569
C116	ENGINE COMPT.-LUBRICATOR PUMP	TC	2	561268	562997
C117	UNDER DASH-RH WIPER MOTOR	AMP FF	6	------	561186
C118	UNDER DASH-RH L/H FAN	TC	2	561268	562997
C119	UNDER DASH-RH RH FAN	TC	2	561268	562997
C120	RR JCT BDI-COOLER-CONTROL	AMP HNL	2	561248	562247
C121	RR JCT BDI COMPT.-AT KYH	AMP CPC	16	560639	560640
C122	RR JCT BDI COMPT.-AT KYH	AMP CPC	16	560639	560640
C123	FR SERVICE COMPT.-KNEELING	ITT SS	3	561811	561880
C124	BATTERY COMPT.-DOOR SW.L.T.H	ITT SS	2	561813	561812
C125	RR JCT BDI-COMPT.-DOOR VALVE	PED WP	2	561566	561569
C126	ENGINE CPT-ECM	PED WP	2	561566	561569

CONNECTORS CODE ID Page G-2

No.	LOCATION	#ND TYPE	*PIN CAVITY	*SOCKET HOUSING	HOUSING
C125	ENGINE CPT-B-U ALARM	PED WP	2	561566	561569
C126	ENGINE CPT-FLUSHING PUMP	PED WP	2	561566	561569
C127	ENGINE CPT-FUEL FILTER	PED WP	2	561566	561569
C128	ENGINE CPT-A/C COMPRESSOR	ITT SS	2	561813	561812
C129	ENGINE CPT-LUBRICATOR	AMP CPC	16	560639	560640
C130	ENGINE CPT-UNLOADER	ITT SS	2	561813	561812
C131	ENGINE CPT-RH DOOR-SOL.1	PED WP	2	561566	561569
C132	ENGINE CPT-W/C L.O.PRESS SW	PED WP	2	561566	561569
C133	ENGINE CPT-W/C L.O.PRESS SW	PED WP	2	561566	561569
C134	ALARM JCT BDI COMPARTMENT	PED WP	4	561610	561611
C136	FR JCT BDI-LUGGAGE DOOR CONS.	AMP HNL	15	561787	561786
C137	A/C JCT BDI	AMP CPC	16	560639	560640
C138	A/C JCT BDI-TRANSMITTER	AMP HNL	2	560800	560898
C138	A/C JCT BDI-CONTROL MODULE	AMP HNL	2	560800	560898
C139	A/C JCT BDI-L-DOOC MODULE	AMP HOP	15	562811	------
C142	LAVATORY-DOOR WALL	HNL	2	562248	562247
C143	LAVATORY-DOOR WALL	AMP HNL	3	560800	560898
C200	RH HAT RACK-RH SIDE L.T.S	AMP HNL	9	560661	561662
C203	RH HAT RACK-BALLAST	AMP HNL	9	560661	561662
C204	RH HAT RACK-GENERAL L.T	AMP HNL	9	560661	561662
C205	RH SECT.-RH HAT RACK SPEAKER	AMP HNL	9	560661	561662
C206	RH HAT RACK-READING L.T	AMP HNL	2	562248	562247
C207	RH HAT RACK-READING L.T	AMP HNL	2	562248	562247
C208	LH HAT RACK-BALLAST	AMP HNL	4	560851	560852
C210	RR SECT.-LH HAT RACK SPEAKER	AMP HNL	9	560661	561662
C211	FR SIDE-STORE LH	AMP HNL	2	560800	560898
C212	FR SIDE-STORE LH	AMP HNL	2	560800	560898
C213	FR ROOF-CLEARANCE L.T	AMP HNL	2	560800	560898
C216	UNDER DASH-LH-P.A.	AMP HNL	9	560636	560637
C217	UNDER DASH-LH-P.A.	AMP HNL	3	------	561558
C218	UNDER DASH-LH-P.A.	AMP HNL	3	------	561558
C219	UNDER DASH-LH-P.A.	AMP HNL	3	------	561558
C220	INJECT.SUB-L.FUEL PRIME PUMP	TC	1	561818	561873
C222	ALARM JCT BDI-CONT.-WATER	AMP HNL	9	560661	561662
C223	ALARM JCT BDI-CNT.-DRSW.SPK.	AMP HNL	9	560661	561662
C224	WATER COMPT.-LOW LEVEL SENS.	AMP HNL	9	560661	561662
C227	RH SW.PANEL-SPEAKER	AMP HNL	9	560636	560637
C228	RH SW.PANEL-HIGRO.OUTLET	HOLEX	4	561477	561476
C229	ENGINE CPT-PH.SW.FUEL	DEUTSCH	2	561477	561476
C230	ENGINE CPT-FUEL PRIME PUMP FEED	DEUTSCH	2	562498	562495
C231	ENGINE CPT-FUEL PRIME PUMP	PED WP	2	561566	561569
C232	ENGINE CPT-FUEL PRIME PUMP	PED WP	2	561566	561569
C233	INSTRUMENT PANEL CENTER	HOLEX	4	561477	561476
C234	INSTRUMENT PANEL CENTER	HOLEX	4	561477	561476
C235	UNDER DASH-LH-JACOB CLUTCH	ITT SS	3	561811	561880
C236	UNDER DASH-LH-JACOB CLUTCH	ITT SS	3	561811	561880
C237	UNDER DASH-LH-JACOB CLUTCH	ITT SS	3	561811	561880
C238	A/C JCT BDI-DOOR CONNECTOR	AMP HNL	9	560636	560637
C239	FR SERVICE CPT-HI BUZZ VALVE	PED WP	2	561566	561569
C240	FR SERVICE CPT-KNEEL PRSD SW	PED WP	2	561566	561569
C241	FR SERVICE CPT-FOG RESISTOR	AMP CPC	3	561847	561862
C242	FR SERVICE CPT-FOG RESISTOR	AMP CPC	3	561847	561862
C243	FR SERVICE CPT-HEADLAMPS	TC	1	------	561873
C244	FR SERVICE CPT-RH FOG LAMP	ITT SS	2	561813	561812
C245	FR SERVICE CPT-RH FOG LAMP	ITT SS	2	561813	561812
C246	FR SERVICE CPT-HARN.& DIR.L.T	ITT SS	3	561811	561880
C248	ALARM JCT BDI-WIPER PULSE GEN	AMP FF	6	------	561189
C249	ALARM JCT BDI-CONN.12V TO 5V	AMP HNL	3	561667	561550

CONNECTORS CODE ID Page G-3

No.	LOCATION	#ND TYPE	*PIN CAVITY	*SOCKET HOUSING	HOUSING
C250	ALARM JCT BDI-DASH LTS REGUL.	AMP HNL	4	561952	561515
C251	LH SW.PANEL-FAST IDLE	SWF	8	------	561087
C252	LH SW.PANEL-SWITCH L.T	SWF	2	------	561837
C253	LH SW.PANEL-ETHER	SWF	2	------	561837
C254	INST.PANEL-RH ENTR.DOOR SW.	TORRI	5	------	562108
C255	LH SW.PANEL-ESS.SW.L.T	SWF	2	------	561837
C257	INSTRUMENT PANEL CENT-SPEEDO	AMP HNL	4	560851	560852
C258	LH SW.PANEL-MULTI FUNC. SW	SWF	8	------	561087
C259	LH SW.PANEL-MULTI FUNC. SW	AMP FF	6	------	561186
C260	UNDER DASH-RH DOOR-MODULE	AMP HNL	4	561951	561668
C261	UNDER DASH-RH DOOR-MODULE	AMP HNL	4	561951	561668
C262	UNDER DASH-RH DOOR MODULE	AMP HNL	4	561951	561668
C263	UNDER DASH-RH DOOR MODULE	AMP HNL	3	561667	561558
C264	UNDER DASH-RH DOOR MODULE	AMP HNL	3	561667	561558
C265	UNDER DASH-RH DOOR MODULE	AMP HNL	3	561667	561558
C267	UNDER DASH-RH	AMP CPC	24	560642	560643
C268	UNDER DASH-LH-HORROR	HOLEX	4	561552	561555
C269	UNDER DASH-RH HORROR	HOLEX	4	561552	561555
C270	RH SW.PANEL-SPEAKER	AMP HNL	9	560636	560637
C271	RH HORROR POST	HOLEX	6	562248	562247
C272	LH HORROR	SPARTAN	6	560558	------
C273	RH HORROR	SPARTAN	6	560558	------
C274	RADIO	AMP HNL	9	561667	561669
C275	UNDER DASH-RH-DOOR CONT.	AMP HNL	2	560800	560898
C276	UNDER DASH-RH-LOCK SOL.W/LVE	AMP HNL	2	562148	562147
C280	RH SW.PANEL-LH-P.A.	AMP HNL	9	560636	560637
C281	ENGINE COMPT-L.T.S.SW	PED WP	2	561566	561569
C282	ENGINE COMPT-L.T.S.SW	PED WP	2	561566	561569
C283	RH SW.PANEL-SWITCH L.T	SWF	2	------	561837
C284	LH CONSOLE COMPT.-VIDEO SYST.	AMP HNL	4	561671	561669
C285	INSTRUMENT PANEL-RH-CTS	AMP HNL	2	562148	562147
C287	INSTRUMENT PANEL-RH-LTS	AMP HNL	2	562148	562147
C288	RH SW.PANEL-SWITCH L.T	SWF	2	------	561837
C289	LH DASH-CTR-WIPER MOTOR	AMP FF	6	------	561186
C290	RH ROOF-WATCH-YOUR STEP L.T	AMP HNL	2	562148	562147
C294	RH ROOF-SWITCH L.T	AMP HNL	3	561667	561558
C295	FR ROOF-UP WINDSHIELD DEFROST	AMP HNL	3	561667	561558
C296	RH CONSOL-SW.L.T	AMP HNL	3	561667	561558
C300	INSTRUMENT PANEL CENT-TACO	AMP HNL	4	560851	560852
C301	INSTRUMENT PANEL-CENT-SIGN	AMP HNL	4	560851	560852
C306	GALLEY	AMP HNL	9	561661	561662
C307	GALLEY-SW.-PHEDISTAT	AMP HNL	3	561667	561669
C309	DDEC ENGINE-ECM POWER CONS.	PED HP	5	------	562345
C310	LH CONSOL-SW.VIDEO & PAS CHIME	SWF	8	------	561087
C311	LH CONSOL-SW.VIDEO & PAS CHIME	SWF	8	------	561087
C312	LH CONSOL-SW.CEN & FLOOR LTS	SWF	8	------	561087
C313	LH CONSOL-SW.CEN & FLOOR LTS	SWF	8	------	561087
C314	LH CONSOL-SW.WINDOW LTS	SWF	8	------	561087
C315	LH CONSOL-SW.WINDOW LTS	SWF	8	------	561087
C316	LH CONSOL-SPARE SWITCH	SWF	8	------	561087
C317	LH CONSOL-SPARE SWITCH	SWF	8	------	561087
C318	LH CONSOL-SW.DRV WINDOW LIFT	SWF	8	------	561087
C320	LH CONSOL-SW.DRIVER'S LTS	SWF	8	------	561087
C321	LH CONSOL-SW.WIND LIFT HOT.	PED PO	2	------	561848
C322	LH CONSOL-SW.CTR.DAN.WARN.	SWF	8	------	561087
C324	GALLEY-REFRIGERATOR	AMP HNL	2	562147	562148
C325	LH CONSOLE-SW.WIND.LIFT	SWF	8	------	561087
C326	LH CONSOLE-SW.SPARE	SWF	8	------	561087
C327	ENGINE COMPT-MR-START SW.BOY	DEUTSCH	5	562565	562566

CONNECTORS CODE ID Page G-3

No.	LOCATION	#ND TYPE	*PIN CAVITY	*SOCKET HOUSING	HOUSING
C328	GALLEY-LAMP	AMP HNL	2	562148	562147
C329	ENGINE TACHO SIGNAL	PED WP	2	561566	561569
C330	GALLEY-MICROWAVE SW.L.T	SWF	2	------	561837
C331	GALLEY-MICROWAVE SW	SWF	2	------	561837
C332	GALLEY-RH CONTAINER SW.L.T	SWF	8	------	561087
C333	GALLEY-RH CONTAINER SW.L.T	SWF	8	------	561087
C334	GALLEY-LH CONTAINER SW	SWF	8	------	561087
C335	GALLEY-LH CONTAINER SW.L.T	SWF	8	------	561087
C337	INSTR.PANEL-LH-UP WIPER SW	SWF	8	------	561087
C338	INSTR.PANEL-LH-UP WIPER SW	SWF	8	------	561087
C339	UNDER DASH-DOOR-MODULE	AMP HNL	4	561951	561668
C340	ALARM JCT BDI-COMP.	AMP HNL	2	560800	560898
C341	INSTR.PANEL-LH-HORNS SW	SWF	8	------	561087
C342	INSTR.PANEL-LH-HEADLAMP SW	SWF	8	------	561087
C343	INSTR.PANEL-LH-FOG L.T SW	SWF	8	------	561087
C344	INSTR.PANEL-LH-FOG L.T SW	SWF	8	------	561087
C345	INSTR.PANEL-LH-DASHLT SW	SWF	8	------	561087
C346	INSTR.PANEL-LH-DASHLT SW	SWF	8	------	561087
C347	INSTR.PANEL-LH-DASHLT SW	AMP HNL	2	560800	560898
C348	ALARM JCT BDI-COMP.	AMP HNL	2	560800	560898
C349	RH CONSOL-RELEUCEDOOR	AMP HNL	2	562148	562147
C350	RH CONSOLE-THERMOMETER	AMP HNL	3	561667	561558
C351	LH HAT RACK-FLOOR LTS	HOLEX	4	561477	561476
C352	RH CONSOLE-CEN TEMP SENSOR	BURNDY	4	561184	------
C353	INSTR.PANEL RH-ONY FAN RHEOST	AMP HNL	5	561552	561555
C354	INSTR.PANEL RH-ONY TEMP CTR	AMP HNL	5	561552	561555
C355	INSTR.PANEL RH-FRT TEMP CTR	AMP HNL	5	561667	561558
C357	INSTR.PANEL RH-WATER TEMP SW	AMP HNL	3	561667	561558
C358	INSTR.PANEL RH-ONY FAN SW	AMP HNL	3	561667	561558
C359	INSTR.PANEL CENT-TAC & SPEED	AMP HNL	2	560800	560898
C361	FR ROOF-WIPER MOTOR	AMP FF	6	------	561186
C362	LH CONSOLE-SW.CENTER OCCUPIED	AMP HNL	2	562148	562147
C363	INSTRUMENT PANEL RH-LTS	AMP HNL	2	562148	562147
C364	RH ROOF-SWITCH L.T	AMP HNL	3	561667	561558
C365	FR ROOF-UP WINDSHIELD DEFROST	AMP HNL	3	561667	561558
C366	RH CONSOL-SW.L.T	AMP HNL	3	561667	561558
C368	CONSOLE-DEF.COL.T SENSOR PED	AMP HNL	2	561566	561569
C369	FR ROOF-DEST.SIGN OPER.SW.	TORRI	5	------	562108
C370	FR ROOF-DEST.SIGN OPER.SW.	TORRI	5	------	562108
C371	FR ROOF-DEST.SIGN FLUORS.	AMP HNL	2	560800	560898
C372	FR ROOF-DEST.SIGN SPEED SW	HOLEX	4	561477	561476
C374	ALARM JCT BDI COMPT-MASTER SW	AMP HNL	6	561552	561555
C375	ALARM JCT BDI COMPT-LH CONSOL	AMP HNL	6	561552	561555
C376	ALARM JCT BDI COMPT-LH CONS.	AMP CPC	37	560714	560713
C377	LH SW.PANEL-STOP ENGOVERIDE	SWF	8	------	561087
C378	LH SW.PANEL-STOP ENGOVERIDE	SWF	8	------	561087
C379	ALARM JCT BDI-MIC W/ SWITCH	AMP HNL	2	562148	562147
C380	FR SERV.COMPT-UNDERHEATH.LTS	AMP HNL	9	560661	561662
C381	LH CONSOLE-W/C POWER SYSTEM	SWF	8	------	561087
C387	RR JCT BDI-W/C	AMP HNL	9	560661	561662

CONNECTORS CODE ID Page G-2

No.	LOCATION	#ND TYPE	*PIN CAVITY	*SOCKET HOUSING	HOUSING
C388	RR JCT BDI-WCL/	AMP HNL	12	561735	561734
C389	WCL REAR DOOR	HOLEX	4	561477	561476
C390	LAVATORY-WALL-WCL REMOTE CTR	SWF	8	------	561087
C391	LAVATORY-WALL-WCL/LAMP	SWF	8	------	561087
C392	LAVATORY-WALL-WCL SW.L.T.	SWF	8	------	561087
C393	LAVATORY-WALL-WCL REMOTE STS.	AMP CPC	4	561686	561687
C394	UNDER INSTRUMENT PANEL-LH	AMP HNL	4	560851	560852
C395	DRIVER'S COMPT.-B-U MONITOR	AMP	5	------	562465
C396	FR SERV.COMPT.-CENTRAL LTS	AMP HNL	2	560800	560898
C397	ENGINE COMPT.-CENTRAL LTS	HOLEX	6	562078	562069
C398	FR SECT.LH HAT RACK-AMPL1	HOLEX	6	------	562464
C399	FR SECT.LH HAT RACK-AMPL2	HOLEX	6	------	562464
C400	ENGINE COMPT.-BLOCK HEATER	PED HP	3	561781	561782
C401	FR SECT.LH HAT RACK-AMPL1	HOLEX	6	------	562464
C402	RR DRIVE AXLE-AIR DRYER	PED HP	2	------	562251
C403	GALLEY-FWD/REFRIGER.	AMP HNL	2	562248	562247
C406	FR JCT BDI COMPT.-WATI-SKID	AMP HNL	2	560800	560898
C407	FR SERV.COMPT.-SIGN	AMP HNL	2	560800	560898
C408	ENGINE COMPT.-SIGN	PED WP	4	561686	561687
C409	ENGINE CPT.-LOW COOL.LEVEL	PED HP	2	562358	------
C410	FR JCT BDI-DOOR CONNECTOR	AMP HNL	15	561787	561786
C412	FR JCT BDI-DOOR CONNECTOR	AMP HNL	15	561787	561786
C412	LH SW.PANEL-MASTER SWITCH	SWF	8	------	561087
C413	ENG.CPT-A/C HI UNLOAD.PRS SW	PED WP	2	561566	561569
C414	RR JCT BDI	AMP HNL	9	560678	560669
C416	ENGINE CNSOLE-FAN SIGNAL	AMP HNL	2	561781	561782
C417	ENGINE CNSOLE-FAN SIGNAL	AMP HNL	2	561781	561782
C417	FRONT JCT BDI-CODECS	AMP HNL	15	561787	561786
C418	INSTR.PANEL LH-HTR WINDOWS SW	SWF	8	------	561087
C419	FR JCT BDI-DOOR CONN.FOR JACOB	AMP HNL	3	561667	561558
C420	ENGINE COMPT.-WEBASTO WATER HTR	TC	2	561597	------
C421	ENGINE COMPT.-WEBASTO WATER HTR	TC	1	561873	------
C422	ENGINE COMPT.-WEBASTO WATER HTR	TC	2	561597	------
C423	UNDER DASH-RH-DOOR CENTER	AMP HNL	3	561667	561558
C425	ALARM JCT BDI-CODECS	AMP HNL	15	561787	561786
C426	ALARM JCT BDI-CODECS	AMP HNL	15	561787	561786
C427	ALARM JCT BDI-DOOR	AMP HNL	6	561552	561555
C430	ALARM JCT BDI-COMPT.-TIMER	AMP FF	8	561188	561363
C431	ALARM JCT BDI-DOOR-MEL.T.H.D	AMP HNL	2	560800	560898
C432	ENGINE CPT.-PROV.SW.DOOR AJAR	DEUTSCH	4	562479	562477
C433	FRONT JCT BDI-CONN.FL.PRESS.SW	AMP HNL	3	561667	561558
C434	FRONT JCT BDI-CODECS	AMP HNL	15	561787	561786
C435	FR SERVICE CPT.-RH KNEEL.PRS.SW	PED WP	2	560800	560898
C436	RH HAT RACK-WCL CENTER ROOF A/C	AMP CPC	16	560639	560640
C437	WORLD TRANSM.-MAIN CONNECTOR	DEUTSCH	31	562572	562536
C438	WORLD TRANSM.-TURBINE SENSOR	PED HP	2	------	562426
C439	WORLD TRANSM.-ENGINE SPS.SENS.	PED HP	2	------	562426
C440	WORLD TRANSM.-SPEED SENSOR	ITT	2	------	562541
C441	WORLD TRANSM.-RETARDER TEMP.	PED HP	2	561566	561569
C442	WORLD TRANSM.-SOL.VALVE	PED HP	2	561566	561569
C443	WORLD TRANSM.-SENSOR CONN.	DEUTSCH	36	562578	562573
C444	RR JCT BDI-ODL CONN W.C.	PED HP	12	------	562574

CONNECTORS CODE ID Page G-2

No.	LOCATION	#ND TYPE	*PIN CAVITY	*SOCKET HOUSING	HOUSING
C465	LH CONSOLE-SHIFTER SELECTOR	T & BET	18	------	562429
C466	FR SERVICE CPT.-RESIS.HOO.	PED WP	3	------	562428
C467	FR SERVICE CPT.-RESIS.HOO.	PED WP	3	------	562428
C468	FR SERV.COMPT.-WCL SW.L.T.	PED WP	1	------	562873
C470	FR SERVICE CPT.-SILENT 1000	AMP HNL	2	562248	562247
C471	FR SERVICE CPT.-SILENT 1000	AMP HNL	2	562248	562247
C472	FR SERVICE CPT.-SILENT 1000	PED HP	2	561566	561569
C473	FR SERVICE CPT.-SILENT 1000	AMP HNL	2	560800	560898
C474	ALARM JCT BDI-PROPEVENT	HOLEX	4	561478	562069
C501	LH CONSOLE-PROPEVER HOLDER	PED HP	3	562433	------
C502	LH CONSOLE-PRE HEATER SW.	SWF	8	------	561087
C503	LH CONSOLE-PRE

LAZER FORMAT A1 CUTE 1.2:

CONNECTORS CODE (C) Page G:1

No.	LOCATION	#@ TYPE	*PIN CAVITY	*SOCKET HOUSING	HOUSING
C1	FR JCT BOX COMPARTMENT	AMP CPC	37	560644	560646
C2	FR JCT BOX COMPARTMENT	AMP CPC	24	560641	560643
C3	FR JCT BOX COMPARTMENT	AMP CPC	37	560714	560713
C4	FR JCT BOX COMPARTMENT	AMP CPC	16	560493	560495
C5	FR SERVICE COMPT.-UNDERNEATH	AMP CPC	37	560644	560646
C6	FR SERVICE COMPT.-UNDERNEATH	AMP CPC	24	560641	560643
C7	FR SERVICE COMPT.-UNDERNEATH	AMP CPC	37	560714	560716
C8	FR SERVICE COMPT.-UNDERNEATH	AMP CPC	37	560714	560713
C9	ALARM JCT BOX	AMP CPC	37	560644	560646
C10	ALARM JCT BOX	AMP CPC	37	560644	560646
C11	FR SERVICE COMPARTMENT	AMP CPC	24	560642	560643
C12	FR SERVICE COMPARTMENT	AMP CPC	24	560641	560643
C13	LH CONSOLE-HEATER MDL	AMP HNL	2	561248	561247
C13	FR SERVICE COMPT.	AMP HNL	3	560552	560555
C13	LH CONSOLE-C.ETR.HORROR	AMP HNL	6	561552	561555
C14	UNDER DASH-LH HORROR	AMP HNL	9	560692	560698
C15	RR JCT BOX	AMP CPC	24	560641	560643
C16	UNDER DASH-RH HORROR	AMP HNL	9	560692	560662
C16	LH CONSOLE-S.W-CRUISE ON/OFF	SWF	8	------	561087
C17	LH CONSOLE-S.W-CRUISE RESUME	SWF	8	------	561087
C18	LH CONSOLE-S.W-CRUISE SET	SWF	8	------	561087
C20	RR JCT BOX	AMP CPC	37	560644	560646
C21	RR JCT BOX	AMP CPC	24	560641	560643
C26	HYD & HAN TRANSM.-NEUT.& R-U	PED WP	4	561610	561611
C27	HYD & HAN TRANSM.-SPEED SENS.	PED WP	2	561566	561690
C30	DOOC ENGINE-ECM	PED	30	------	561600
C35	RR JCT BOX	AMP CPC	37	560644	560646
C36	EMERGENCY-EXIT LTS	AMP HNL	2	561248	561247
C37	RR SECTION-LH HAT RACK	AMP HNL	9	560661	560662
C38	RR SECTION-RH HAT RACK	AMP HNL	9	560661	560662
C40	RR JCT BOX	AMP CPC	16	560493	560494
C41	LAVATORY-ROOF FLOOR/CEILING	AMP HNL	2	560908	560898
C42	LAVATORY-BACK WALL-WTR TANK	AMP HNL	2	560908	560898
C43	LAVATORY-BACK WALL-ACCESS.	AMP HNL	18	560666	560667
C45	ALARM JCT BOX COMPARTMENT	AMP CPC	24	560642	560643
C47	FR SERVICE COMPT.-UNDERNEATH	AMP CPC	37	560714	560716
C49	BATTERY CHG.-LH	AMP HNL	2	561248	561247
C50	FR SERVICE COMPT.-LOW BLOC	PED WP	11	560685	561517
C52	RR JCT BOX	AMP CPC	22	560718	560717
C53	RR JCT BOX	AMP CPC	14	560585	560584
C54	UNDER DASH-LH VNT	HNL	6	560552	560555
C55	UNDER DASH-RH SW PANEL	AMP CPC	9	560636	560637
C56	UNDER DASH-RH CONSOLE	AMP CPC	24	560642	560643
C57	UNDER DASH-RH ACCESSORIES	AMP CPC	22	560769	560718
C58	UNDER DASH-RH ACCESSORIES	AMP CPC	22	560769	560718
C59	EVAPORATOR COMPARTMENT	AMP HNL	2	560908	560898
C60	RR JCT BOX COMPT.-L/T	AMP HNL	2	561248	561247
C61	LUGGAGE COMPARTMENT-LTS	AMP HNL	2	561248	561247
C62	LUGGAGE COMPARTMENT-LTS	AMP HNL	2	561248	561247
C63	LUGGAGE COMPARTMENT-LTS	AMP HNL	2	561248	561247
C64	LUGGAGE COMPARTMENT-LTS	AMP HNL	2	561248	561247
C65	LUGGAGE COMPARTMENT-LTS	AMP HNL	2	561248	561247

CONNECTORS CODE (C) Page G:1

No.	LOCATION	#@ TYPE	*PIN CAVITY	*SOCKET HOUSING	HOUSING
C66	LUGGAGE COMPARTMENT-LTS	AMP HNL	2	561248	561247
C67	LUGGAGE COMPARTMENT-LTS	AMP HNL	2	561248	561247
C68	LUGGAGE COMPARTMENT-LTS	AMP HNL	2	561248	561247
C69	RH AXLE ACC-DIODE PVC END	PED WP	6	561568	561578
C70	ALARM JCT BOX COMPARTMENT	AMP CPC	24	560642	560643
C71	UNDER INSTRUMENT PANEL-LH	AMP CPC	37	560645	560646
C72	UNDER INSTRUMENT PANEL-CENT.	AMP CPC	37	560645	560646
C73	UNDER INSTRUMENT PANEL-CENT.	AMP CPC	16	560639	560640
C74	ALARM JCT BOX COMPARTMENT	AMP CPC	24	560642	560643
C75	ALARM JCT BOX COMPARTMENT	PED WP	4	561608	561611
C76	LUGGAGE COMPT.-AIR RET.SENS.	AMP HNL	2	561248	561247
C77	LUGGAGE COMPT.-AIR RET.SENS.	AMP HNL	2	561248	561247
C78	FR JCT BOX COMPARTMENT	PED WP	22	561709	561718
C79	FR SERVICE COMPT.-UNDERNEATH	AMP CPC	37	560644	560646
C80	LUGGAGE COMPT.-AIR RET.SENS.	AMP HNL	2	561248	561247
C81	PASSENGER COMPT.-HOLE L/T	AMP HNL	2	560908	560898
C82	ENTRANCE DOOR	HOLEX	6	562078	562069
C83	ENTRANCE DOOR-PRESSURE SW.	AMP HNL	2	561476	561476
C84	ENTRANCE DOOR-PRESSURE SW.	PED WP	2	561566	561690
C85	UNDER INSTRUMENT PANEL-LH	AMP HTA-100	8	------	562248
C86	RR END ROOF	AMP CPC	9	560636	560637
C87	RR END ROOF-CLEARANCE LTS	AMP HNL	2	560908	560898
C88	RR END ROOF-B.U.HORN/STAR	CONNINCE	3	562565	562680
C90	RR JCT BOX	AMP CPC	15	561987	561986
C91	RR JCT BOX	AMP CPC	37	560644	560646
C92	FR JCT BOX COMPT.-VNT1 SKID	AMP CPC	9	560635	560637
C93	FR JCT BOX COMPT.-VNT2 SKID	AMP CPC	9	560635	560637
C94	FR AXLE-ACCESSORIES	AMP HNL	14	560585	560585
C97	RH AXLE ACC-DIODE PVC END	PED WP	6	561568	561578
C98	FR SERVICE COMPT.-ELC.F.PEDAL	PED WP	3	561566	561690
C99	FR SERVICE COMPT.-LTS	AMP HNL	2	561248	561247
C100	FR SERVICE COMPT.-CONNECTING	AMP HNL	2	560908	560898
C101	FR SERVICE COMPT.-ELEC.HORNS	PED WP	2	561566	561690
C102	FR SERV.-RH WIPER PULSE	AMP FF	6	560186	560187
C103	FR SERV.& SERV.COMPARTMENTS	FFT SS	2	561813	561812
C104	FR SERVICE COMPT.-LTS.& HAL.HT	PED WP	2	561566	561690
C105	FR SERVICE COMPT.-LTS.& HAL.HT	PED WP	2	561566	561690
C106	FR SERVICE COMPT.-WATER VALVE	PED WP	2	561566	561690
C107	EVAPORATOR-TOP COMPT.-DAMPER	PED WP	2	561566	561690
C108	FR SERVICE COMPT.-KNEELSYS	PED WP	2	561566	561690
C109	FR SERVICE COMPT.-KNEELSYS	PED WP	2	561566	561690
C110	FR SERVICE COMPT.-KNEELSYS	PED WP	2	561566	561690
C111	EVAPORATOR COMPT.-DAMPER	FFT SS	2	561813	561812
C113	BATT.& RH JUEJOT.MARKER.L/T	FFT SS	2	561813	561812
C114	BATT.& RH JUEJOT.MARKER.L/T	FFT SS	2	561813	561812
C115	ENGINE COMPT.-LTS	PED WP	2	561566	561690
C116	ENGINE COMPT.-LTS	PED WP	2	561566	561690
C117	ENGINE COMPT.-LAVATORY FAN	TC	2	561938	562997
C118	ENGINE CPT RH DOOR-HL O LAMP	FED WP	6	561686	561687
C119	ENGINE CPT RH DOOR-LH L.O.LAMP	PED WP	6	561686	561687
C120	BATTERY CPT.-DOOR SW.L.T.RH	FFT SS	2	561813	561812
C121	ENGINE CPT-CHAMBER DOOR VALVE	PED WP	2	561566	561690
C124	ENGINE CPT-ETHER SW	PED WP	2	561566	561690

CONNECTORS CODE (C) Page G:2

No.	LOCATION	#@ TYPE	*PIN CAVITY	*SOCKET HOUSING	HOUSING
C125	ENGINE CPT-BU.U.ALARM	PED WP	2	561566	561690
C126	ENGINE CPT-FLUSHING PUMP	PED WP	2	561566	561690
C127	ENGINE CPT-FUEL FILTER	PED WP	2	561566	561690
C128	ENGINE CPT-U.K COMPUL.LOTH	FFT SS	2	561813	561812
C129	ENGINE CPT-RH WIPER	AMP FF	6	560186	560187
C130	ENGINE CPT-UN.DOOR	FFT SS	2	561813	561812
C131	ENGINE CPT-HL O.C.PRESS SW	PED WP	2	561566	561690
C132	ENGINE CPT-HL O.C.PRESS SW	PED WP	2	561566	561690
C133	ALARM JCT BOX COMPARTMENT	PED WP	4	561608	561611
C136	FR JCT BOX-LUGGAGE DOOR CON.	AMP HNL	15	561987	561986
C137	RH JCT BOX	AMP CPC	37	560644	560646
C138	H.C JCT BOX-TRANSMITTER	AMP HNL	2	560908	560898
C139	H.C JCT BOX-L.DOOR MODULE	AMP HDP-20	15	562811	------
C140	H.C JCT BOX-L.DOOR MODULE	AMP HNL	2	561248	561247
C143	LAVATORY-DOOR WALL	AMP HNL	3	560908	560886
C144	ENGINE CPT-HOD.LAMP-L.T.L	AMP HNL	6	561476	561476
C203	RH HAT RACK-BALLAST	AMP HNL	9	560661	560662
C204	RH HAT RACK-GENERAL L.T	AMP HNL	9	560667	560662
C205	FR SECT.-RH HAT RACK SPEAKER	AMP HNL	9	560661	560662
C206	RH HAT RACK-READING L.T	AMP HNL	2	560908	560898
C207	RH HAT RACK-READING L.T	AMP HNL	2	560908	560898
C208	LH HAT RACK-BALLAST	AMP HNL	4	560851	560852
C210	FR SECT.-LH HAT RACK SPEAKER	AMP HNL	9	560661	560662
C211	FR ROOF-STORE LH	AMP HNL	2	560908	560898
C212	FR ROOF-STORE LH	AMP HNL	2	560908	560898
C213	FR ROOF-CLEARANCE L.T	AMP HNL	2	560908	560898
C216	UNDER DASH-LH P.A.	AMP HNL	9	560636	560637
C217	UNDER DASH-LH P.A.	HNL	3	------	561552
C218	UNDER DASH-LH P.A.	AMP HNL	3	------	561552
C219	UNDER DASH-LH P.A.	AMP HNL	3	------	561552
C220	INJECT.-FUEL PRIME PUMP	TC	1	561878	561873
C222	ALARM JCT BOX-CPT.-DRS.SW.	HDLEX	4	561477	561476
C223	ALARM JCT BOX-CPT.-DRS.SW.	AMP HNL	4	560851	560852
C224	FR SERV.& SERV.COMPARTMENTS	FFT SS	2	561813	561812
C227	RH SW.PANEL-SPEAKER	AMP HNL	9	560661	560662
C228	RH SW.PANEL-HIGRO.OUTLET	HDLEX	4	561477	561476
C229	RH SW.PANEL-PA W.MIC	HDLEX	4	561477	561476
C230	ENGCPT.-FUEL PRIME PUMP FEED	DEUTSCH	2	562498	562495
C231	ENGCPT.-FUEL PRIME PUMP	PED WP	2	561566	561690
C232	ENGCPT.-FUEL PRIME PUMP	PED WP	2	561566	561690
C233	INSTRUMENT PANEL-WATER	VJOL	8	------	560643
C234	INSTRUMENT PANEL-CENTER	VJOL	4	------	562844
C235	INSTRUMENT PANEL-CENTER	VJOL	4	------	562844
C236	INSTRUMENT PANEL-CENTER	AMP HNL	2	560908	560892
C237	UNDER DASH-LH-JACOB CLUTCH SW	FFT SS	3	561111	561080
C238	H.C JCT BOX-DOOR CONNECTOR	AMP HNL	9	560678	560669
C239	FR SERVICE CPT-HI BUZZ VALVE	PED WP	2	561566	561690
C240	FR SERVICE CPT-KNEEL PRSS SW	PED WP	2	561566	561690
C241	FR SERVICE CPT-FOG RESISTOR	AMP CPC	3	561847	561862
C242	FR SERVICE CPT-HEADLAMPS	TC	1	561878	561873
C243	FR SERVICE CPT-HEADLAMPS	TC	1	561878	561873
C244	FR SERVICE CPT-RH FOG LAMP	FFT SS	2	561813	561812
C245	FR SERVICE CPT-RH FOG LAMP	FFT SS	2	561813	561812
C246	FR SERVICE CPT-HARN.& DIR.L.T	FFT SS	3	561111	561080
C248	ALARM JCT BOX-WIPER PULSE GEN	AMP FF	6	560186	560187
C249	ALARM JCT BOX-CONV.12V TO 5V	AMP HNL	3	561667	561550

CONNECTORS CODE (C) Page G:3

No.	LOCATION	#@ TYPE	*PIN CAVITY	*SOCKET HOUSING	HOUSING
C250	ALARM JCT BOX-DASH L.TS REGUL.	AMP HNL	6	561552	561515
C251	LH SW.PANEL-F.VENT IDLE	SWF	8	------	561087
C252	LH SW.PANEL-SWITCH L.T	SWF	2	------	561837
C253	LH SW.PANEL-ETHER	SWF	8	------	561087
C254	INST.PANEL-RH ENTR.DOOR SW.	TORRIT	5	------	562110
C255	LH SW.PANEL-DOOR L.T	SWF	2	------	561837
C257	INSTRUMENT PANEL-CENT-SPEEDO	AMP HNL	4	560851	560852 PRIOR REV. B18
C258	INSTRUMENT PANEL-CENT-SW.T	AMP HNL	2	------	562363
C258	LH SW.PANEL-HOLT.FUNC.SW	AMP FF	8	561088	------
C259	LH SW.PANEL-HOLT.FUNC.SW	AMP FF	8	561088	------
C264	FR SERVICE CPT-LUG.DOOR L.T	PED WP	4	561686	561687
C265	UNDER DASH-RH DOOR MODULE	AMP HNL	9	560678	560669
C266	UNDER DASH-RH DOOR MODULE	AMP HNL	9	560678	560669
C267	ENGINE CPT-A/C COMPRESSOR	PED WP	4	561889	561892
C268	ENGINE CPT-COMPRESSOR	AMP HNL	2	560908	560898
C269	ENGINE CPT RH DOOR-LICENCE L.T	DOH-AUTO	2	930210	------
C270	RH HAT RACK-FLUORESCENT	AMP HNL	4	560851	560852
C271	RH HAT RACK-FLUORESCENT	AMP HNL	4	560851	560852
C272	RH HAT RACK-BALLAST	AMP HNL	4	560851	560852
C273	RH HAT RACK-BALLAST	AMP HNL	4	560851	560852
C274	RH HAT RACK-GENERAL L.T	AMP HNL	9	560667	560662
C275	RH HAT RACK-SPEAKER	AMP HNL	9	560661	560662
C276	RH HAT RACK-READING L.T	AMP HNL	2	560908	560898
C277	RH HAT RACK-READING L.T	AMP HNL	2	560908	560898
C278	LH HAT RACK-BALLAST	AMP HNL	4	560851	560852
C279	FR SECT.-LH HAT RACK SPEAKER	AMP HNL	9	560661	560662
C280	FR ROOF-STORE LH	AMP HNL	2	560908	560898
C281	FR ROOF-STORE LH	AMP HNL	2	560908	560898
C282	FR ROOF-CLEARANCE L.T	AMP HNL	2	560908	560898
C283	EVAPORATOR-CPT-WATER PUMP	PED WP	2	561566	561690
C284	EVAPORATOR-CPT-A/C.& HT.SW	PED WP	2	561566	561690
C285	EVAPORATOR-CPT-A/C.& HT.SW	PED WP	2	561566	561690
C286	EVAPORATOR-CPT-WATER PUMP	PED WP	2	561566	561690
C287	EVAPORATOR-CPT-A/C.& HT.SW	PED WP	2	561566	561690
C288	EVAPORATOR-CPT-A/C.& HT.SW	PED WP	2	561566	561690
C289	CONDENSER CPT-A/C.& HT.TEMP.	PED WP	2	561566	561690
C290	CONDENSER CPT-A/C.& HT.TEMP.	PED WP	2	561566	561690
C291	RH AXLE-ABS RH VALVE	W48CD	3	------	641098
C292	RH AXLE-ABS RH VALVE	W48CD	3	------	641098
C293	RH AXLE-ABS LH VALVE	W48CD	3	------	641098
C294	RH AXLE-ABS LH VALVE	W48CD	3	------	641098
C295	RH AXLE-ABS RH SENSOR	W48CD	3	641132	------
C296	RH AXLE-ABS RH VALVE	W48CD	3	------	641098
C297	RH AXLE-ABS LH VALVE	W48CD	3	------	641098
C298	RH AXLE-ABS RH VALVE	W48CD	3	------	641098
C299	FR SERVICE CPT-PA W.MIC	HDLEX	4	561477	561476
C300	ENGCPT.-FUEL PRIME PUMP FEED	DEUTSCH	2	562498	562495
C301	ENGCPT.-FUEL PRIME PUMP	PED WP	2	561566	561690
C302	ENGCPT.-FUEL PRIME PUMP	PED WP	2	561566	561690
C303	INSTRUMENT PANEL-CENTER	VJOL	4	------	562844
C304	INSTRUMENT PANEL-CENTER	VJOL	4	------	562844
C305	INSTRUMENT PANEL-CENTER	AMP HNL	2	560908	560892
C306	LH CONSOLE-S.W-KNEELING	SWF	8	------	561087
C307	LH CONSOLE-S.W-SPARE	SWF	8	------	561087
C308	LH CONSOLE-S.W-SPARE	SWF	8	------	561087
C309	LH CONSOLE-S.W-SPARE	SWF	8	------	561087
C310	LH CONSOLE-S.W-CRUISE ON/OFF	SWF	8	------	561087
C311	LH CONSOLE-S.W-CRUISE RESUME	SWF	8	------	561087
C312	LH CONSOLE-S.W-CRUISE SET	SWF	8	------	561087
C313	LH CONSOLE-S.W-SPARE	SWF	8	------	561087
C314	LH CONSOLE-S.W-SPARE	SWF	8	------	561087
C315	LH CONSOLE-S.W-KNEELING	SWF	8	------	561087
C316	LH CONSOLE-S.W-SPARE	SWF	8	------	561087
C317	LH CONSOLE-CPT-RR START SW.BOX	DEUTSCH	5	562565	562566
C318	LALLEY-LAMP	AMP HNL	2	562248	562141
C319	ENGINE TACHO SIGNAL	AMP FF	3	561786	561789
C320	LH SW.PANEL-DOOR L.T	SWF	2	------	561837
C321	LH SW.PANEL-HORDWARE SW.L.T	SWF	2	------	561837
C330	GALLEY-RH CONTAINER SW.L.T	SWF	2	------	561837
C331	GALLEY-RH CONTAINER SW	SWF	8	------	561087
C332	GALLEY-RH CONTAINER SW.L.T	SWF	2	------	561837
C333	GALLEY-LH CONTAINER SW.L.T	SWF	2	------	561837
C334	GALLEY-LH CONTAINER SW.L.T	SWF	2	------	561837
C337	INSTR.PANEL-LH-UP WOFER SW	SWF	8	------	561087
C338	INSTR.PANEL-LH-UP WOFER SW	SWF	8	------	561087
C339	INSTR.PANEL-LH-UP WASHER SW	SWF	8	------	561087
C340	INSTR.PANEL-LH-HEAT MIRROR	SWF	8	------	561087
C341	INSTR.PANEL-LH-HEAT MIRROR SW	SWF	8	------	561087
C342	INSTR.PANEL-LH-HAZARD L.T SW	SWF	2	------	561837
C344	INSTR.PANEL-LH-HAZARD L.T SW	SWF	2	------	561837
C345	INSTR.PANEL-LH-SWITCH L.T	SWF	2	------	561837
C346	INSTR.PANEL-LH-SWITCH L.T	SWF	2	------	561837
C347	INSTR.PANEL-LH-SWITCH L.T	SWF	2	------	561837
C348	INSTR.PANEL-LH-SWITCH L.T	SWF	2	560920	560918
C349	INSTR.PANEL-EXT-HORN-DOOLE	AMP HNL	3	561667	561550
C350	RH CONSOLE-RED LED HTR	AMP HNL	15	561987	561986
C351	LH HAT RACK-THERMOSTER	AMP HNL	3	561667	561550
C351	LH HAT RACK-FLUOR DISP.	HDLEX	4	561477	561476
C352	RH CONSOLE-LH-HORN TEMP.CONTROL	SWF	8	------	561087
C353	INSTR.PANEL-RH-DRV FAN INHEIST	AMP HNL	6	561552	561515
C354	INSTR.PANEL-RH-DRV FAN INHEIST	AMP HNL	6	561552	561515
C355	INSTR.PANEL-RH-WATER TEMP CTR	AMP HNL	3	561667	561550
C357	INSTR.PANEL-RH-WATER TEMP SW	AMP HNL	3	561667	561550
C358	INSTR.PANEL-RH-CONSOLE SYST.	AMP HNL	3	561667	561550
C359	INSTR.PANEL-CENT-TAC.& SPD.L.T	AMP HNL	2	560908	560898 PRIOR R.B18
C361	FR ROOF-WIPER MOTOR	SWF	2	------	561837
C362	FR ROOF-LAVATORY OCCUPIED L.T	AMP HNL	2	562148	562147
C363	FR ROOF-WATER LEVEL L.T	AMP HNL	2	562148	562147
C364	FR ROOF-DESTINATION SIGN	AMP HNL	3	561667	561558
C365	FR ROOF-DESTINATION SIGN	AMP HNL	3	561667	561558
C366	DIVERTER-CAMERA SW.L.T	AMP HNL	4	561476	562147
C367	ENGINE COMPT-EGF COL.T SENSOR	PED WP	2	561566	561690
C368	ENGINE COMPT-EGF COL.T SENSOR	PED WP	2	561566	561690
C369	LH CONSOLE-SW.RHEOSTAT	TC	2	562380	562997
C370	FR ROOF-DEST.SIGN FLUOR.	AMP HNL	2	560920	560918
C371	FR ROOF-DEST.SIGN FLUOR.	AMP HNL	2	560920	560918
C372	FR ROOF-DEST.SIGN SPEED SW.	HDLEX	4	561477	561476
C374	ALARM JCT BOX COMPT-MASTER SW.AMP	HNL	6	561552	561515
C375	ALARM JCT BOX COMPT-MASTER SW.AMP	HNL	6	561552	561515
C376	ALARM JCT BOX COMPT-LH-PARKING	HDLEX	4	561714	562505
C377	LH SW.PANEL-STOP ENGLEVERDE SWF	8	------	561087
C381	LH CONSOLE-CPT-DIVERTER	DEUTSCH	5	562260	------
C383	ALARM JCB.CPT.-MIC W/O WIRE DEUTSCH	6	562240	562247
C385	FR.SERV.COMPT-UNDERNEATH(C)	AMP HNL	9	560661	560662
C386	LH CONSOLE-MCL POWER SYSTEM	SWF	8	------	561087
C387	RH JCT BOX-VCL	AMP HNL	9	560661	560662

CONNECTORS CODE (C) Page G:2

No.	LOCATION	#@ TYPE	*PIN CAVITY	*SOCKET HOUSING	HOUSING
C388	RR JCT BOX-VCL	AMP HNL	12	561735	561734
C389	WCL REAR DOOR	HOLEX	4	561477	561476
C390	LAVATORY WALL-WCL REMOTE CTR	SWF	8	------	561087
C391	LAVATORY-WALL-WCL LAMP	SWF	8	------	561087
C392	LAVATORY-WCL WL SW.L.T	AMP HNL	2	560835	------
C393	LAVATORY-WALL-WCL REMOTE SYS.	AMP CPC	4	561686	561687
C394	UNDER INSTRUMENT PANEL-LH	AMP HNL	4	560851	560852
C395	DRIVER'S COMPT.-B.U.HORN	AMP HNL	2	------	562573
C396	FR SERV.COMPT-CHAMBER DOOR	PED WP	2	561566	561690
C397	ENGINE COMPT.-CHAN.L.ALARM	PED WP	2	561566	561690
C398	FR SECT.-LH HAT RACK-AMPL1	HDLEX	6	------	562464
C399	FR SECT.-LH HAT RACK-AMPL1	HDLEX	6	------	562464
C400	ENGINE COMPT.-BLOCK HEATER	PED WP	3	561780	561782
C401	FR SECT.-LH HAT RACK-AMPL1	HDLEX	6	------	562464
C402	RR DRIVE AXLE-AIR DRYER	PED WP	2	------	562251
C403	GALLEY-TRANS.MODULE	AMP HNL	2	562248	562147
C406	FR JCT BOX COMPT.-VNT1-SKID	AMP HNL	2	560908	560898
C407	FR JCT BOX COMPT.-VNT2	AMP HNL	2	560908	560898
C408	ENGINE COMPT.-SIGNAL	PED WP	4	561686	561687
C409	ENGINE CPT.-LOW COOL.LEVEL	PED WP	2	------	562350
C410	FR JCT BOX-DOOR CONNECTOR	AMP HNL	15	561987	561986
C411	FR JCT BOX-DOOR CONNECTOR	AMP HNL	15	561987	561986
C412	LH SW.PANEL-MASTER SWITCH	SWF	8	------	561087
C413	ENG.CPT-A/C HI UNLOAD.PRS SW	PED WP	2	561566	561690
C414	RR JCT BOX	AMP HNL	9	560678	560669
C415	ENGINE CNOOLE-FAN SIGNAL	AMP FF	3	561781	561782
C416	ENGINE CNOOLE-FAN SIGNAL	AMP FF	3	561781	561782
C417	FRONT JCT BOX-DIODES	AMP HNL	15	561987	561986
C418	INSTR.PANEL-LH-HTR WINDPISLEW	SWF	8	------	561087
C419	FR JCT BOX-DOOR CONNECTOR JUCJOB	AMP HNL	3	561667	561558
C420	ENGINE COMPT.-WEBASTO WATER HTR	TC	2	561597	------
C421	ENGINE COMPT.-WEBASTO WATER HTR	TC	2	561597	------
C422	ENGINE COMPT.-WEBASTO WATER HTR	TC	2	561597	------
C423	UNDER DASH-CENTER CENTER-AMP	HNL	3	561667	561558
C425	ALARM JCT BOX-DIODES	AMP HNL	15	561987	561986
C426	ALARM JCT BOX-DIODES	AMP HNL	15	561987	561986
C427	ALARM JCT BOX-DIODES	AMP HNL	4	560852	560853
C430	ALARM JCT BOX COMPT.-TIMER	AMP FF	8	561088	561363
C431	ALARM JCT.BOX COMPT.-PRE.WL.TAB	AMP HNL	2	561248	561529
C432	ENGINE CPT.-PROV.SW.DOOR AJAR	DEUTSCH	4	562479	562477
C433	ALARM JCT BOX-PRESS.DO.PRE.W	AMP HNL	2	561248	561529
C434	FRONT JCT.BOX-DIODES	AMP HNL	15	561987	561986
C435	FR SERV.COMPT-CHAMBER DOOR	PED WP	2	561566	561690
C436	RH HAT RACK-WCL CENTER ROOF ACC	AMP CPC	24	560639	560640
C437	RH HAT RACK-WCL CENTER ROOF ACC	AMP CPC	24	560639	560640
C438	GRAPHIC CPT-WCL-LH-PANEL	AMP HNL	2	561248	561529
C439	WIRELESS MICRO-FIRST CPT BAG	HOLEX	2	562558	562549
C440	UNDER DASH-DIOD PANEL	HOLEX	2	562558	562549
C441	SOUND SYS.JCT.PANEL-VCP	PED WP	2	561566	561690
C442	SOUND SYS.JCT.PANEL-FTL.T.VCP	PED WP	2	561566	561690
C443	WIRELESS MICRO-LH HAT-RACK	CINCH	2	562554	562555
C444	FR JCT BOX-DOOR CONNECTOR	AMP HNL	2	------	562427
C447	WORLD TRANSM.-MAIN CONNECTOR	DEUTSCH	31	562572	562536
C448	WORLD TRANSM.-ENGINE SPEEDSNL	HDP-20	15	562811	------
C449	WORLD TRANSM.-ENGINE SPEEDSNL	HDP-20	15	562811	------
C450	WORLD TRANSM.-SPEED SENSOR	FFT	2	------	562541
C451	WORLD TRANSM.-RETARDER TEMP.	PED WP	2	561566	561690

CONNECTORS CODE (C) Page G:2

No.	LOCATION	#@ TYPE	*PIN CAVITY	*SOCKET HOUSING	HOUSING
C452	WORLD TRANSM.-RETARD SOL.N	PED WP	2	------	562426
C453	WORLD TRANSM.-SENSOR CONN.	DEUTSCH	31	562572	562571
C454	RH JCT BOX-DOO CONN.W.T.	PED WP	12	------	562574
C455	LH CONSOLE-SW.RHEOSTAT	TC	2	562380	562429
C456	FR SERVICE CPT.-PRESS.HOOL	PED WP	3	------	562428
C457	FR SERVICE CPT.-

No.	LOCATION	IND #PIN TYPE	*SOCKET CAVITY	HOUSING	HOUSING
C1	FR JCT BDI COMPARTMENT	AMP CPC	37	560644	560646
C2	FR JCT BDI COMPARTMENT	AMP CPC	24	560641	560643
C3	FR JCT BDI COMPARTMENT	AMP CPC	37	560714	560713
C4	FR JCT BDI COMPARTMENT	AMP CPC	16	560693	560695
C5	FR SERVICE COMPT.-UNDERHEATH	AMP CPC	37	560644	560646
C6	FR SERVICE COMPT.-UNDERHEATH	AMP CPC	24	560641	560643
C7	FR JCT BDI COMPARTMENT	AMP CPC	37	560714	560713
C8	FR SERVICE COMPT.-UNDERHEATH	AMP CPC	37	560714	560713
C9	ALARM JCT BDI	AMP CPC	16	560693	560695
C10	ALARM JCT BDI	AMP CPC	37	560644	560646
C11	FR SERVICE COMPARTMENT	AMP CPC	24	560642	560643
C12	FR SERVICE COMPARTMENT	AMP CPC	24	560642	560643
C13	LH CONSOLE-HEATER MTR.	AMP HNL	2	561248	561247
C13	FR SERVICE COMPT.	AMP HNL	2	561552	561515
C13	LH CONSOLE-CTR.HARDR	AMP HNL	6	561552	561515
C14	UNDER DASH-LH MIRROR	AMP HNL	2	561248	561247
C15	RR JCT BDI	AMP CPC	24	560642	560643
C15	UNDER DASH-RH MIRROR	AMP HNL	2	561248	561247
C16	LH CONSOLE SW-CRUISE DN OFF	SWF	8	------	561387
C17	LH CONSOLE SW-CRUISE RESUME	SWF	8	------	561387
C18	LH CONSOLE SW-CRUISE SET	SWF	8	------	561387
C20	RR JCT BDI	AMP CPC	37	560644	560646
C21	RR JCT BDI	AMP CPC	24	560642	560643
C26	HYD & HWA TRANSFL-REUT& B-U	PED WP	4	561618	561611
C27	HYD & HWA TRANSFL-SPEED DFNG	PED WP	4	561618	561611
C30	DDEC ENGINE-EDYI	PED	30	------	561608
C35	FR JCT BDI	AMP CPC	24	560642	560643
C36	EMERGENCY-EXIT LTS	AMP HNL	2	561248	561247
C37	RR SECTION-LH HAT RACK	AMP HNL	9	560661	560662
C38	RR SECTION-RH HAT RACK	AMP HNL	9	560661	560662
C40	RR JCT BDI	AMP CPC	16	560639	560640 PRIOR R201
C41	LAVATORY-ROOF FLOORECSENT	AMP HNL	2	561248	561247
C42	LAVATORY-BACK WALL-WTR TANK	AMP HNL	2	560980	560898
C43	LAVATORY-BACK WALL-HECESL	AMP HNL	9	560661	560662
C45	ALARM JCT BDI COMPARTMENT	AMP CPC	24	560642	560643
C46	FR SERVICE COMPT.-LOW BLKD	PED WP	4	561618	561611
C49	BATTERIE COMPT.-ST	AMP HNL	2	561248	561247
C50	FR SERVICE COMPT.-LOW BLKD	PED WP	4	561625	561577
C52	RR JCT BDI	AMP CPC	22	561701	561718
C53	RR JCT BDI	AMP CPC	14	561595	561594 PRIOR R201
C54	UNDER DASH-RH UNIT	AMP HNL	2	561248	561247
C55	UNDER DASH-RH SW PANEL	AMP CPC	9	560636	560637
C56	UNDER DASH-RH CONSOLE	AMP CPC	24	560642	560643
C57	UNDER DASH-ACCESSORIES	AMP CPC	22	561701	561718
C58	UNDER DASH-ACCESSORIES	AMP CPC	22	561701	561718
C59	EVAPORATOR COMPARTMENT	AMP CPC	16	560639	560640
C60	RR JCT BDI COMPT.-LT	AMP HNL	2	561248	561247
C61	LUGGAGE COMPARTMENT-LTS	AMP HNL	2	561248	561247
C62	LUGGAGE COMPARTMENT-LTS	AMP HNL	2	561248	561247
C63	LUGGAGE COMPARTMENT-LTS	AMP HNL	2	561248	561247
C64	LUGGAGE COMPARTMENT-LTS	AMP HNL	2	561248	561247
C65	LUGGAGE COMPARTMENT-LTS	AMP HNL	2	561248	561247
C66	LUGGAGE COMPARTMENT-LTS	AMP HNL	2	561248	561247
C67	LUGGAGE COMPARTMENT-LTS	AMP HNL	2	561248	561247
C68	LUGGAGE COMPARTMENT-LTS	AMP HNL	2	561248	561247
C69	RR-AXLE ACC-INSIDE PVC END	PED WP	6	561568	561578

No.	LOCATION	IND #PIN TYPE	*SOCKET CAVITY	HOUSING	HOUSING
C70	ALARM JCT BDI COMPARTMENT	AMP CPC	24	560642	560643
C71	UNDER INSTRUMENT PANEL-LH	AMP CPC	37	560645	560646
C72	UNDER INSTRUMENT PANEL-CENT.	AMP CPC	37	560645	560646
C73	UNDER INSTRUMENT PANEL-CENT.	AMP CPC	16	560639	560640
C75	UNDER INSTRUMENT PANEL-RH	AMP CPC	37	560642	560643
C76	ALARM JCT BDI COMPARTMENT	PED WP	4	561618	561611
C77	LUGGAGE COMPT.-AIR RET.SENS.	AMP HNL	2	561248	561247
C78	LUGGAGE COMPT.-AIR RET.SENS.	AMP HNL	2	561248	561247
C79	LUGGAGE COMPT.-AIR RET.SENS.	AMP HNL	2	561248	561247
C80	LUGGAGE COMPT.-AIR RET.SENS.	AMP HNL	2	561248	561247
C81	FR SERVICE COMPT.-UNDERHEATH	AMP HNL	9	560661	560662
C82	LUGGAGE COMPT.-AIR RET.SENS.	AMP HNL	2	561248	561247
C83	PASSENGER COMPT.-HIDE LTS	AMP HNL	2	561248	561247
C82	ENTRANCE DOOR	HOLEX	6	562873	562895
C83	ENTRANCE DOOR-PRIORITY-SW	HOLEX	2	------	561477
C84	ENTRANCE DOOR-PRESSURE SW	PED WP	2	561566	561560
C85	UNDER INSTRUMENT PANEL-LH	AMP HNL	2	561248	561247
C86	RR ROOF-CLEARANCE LTS	AMP HNL	2	561248	561247
C87	RR ROOF-CLEARANCE LTS	AMP HNL	2	560980	560898
C88	RR JCT BDI-RR DIFF-LOCK	AMP CPC	9	560636	560637
C90	RR JCT BDI	AMP CPC	15	561767	561786
C91	RR JCT BDI	AMP CPC	37	560714	560713
C92	FR JCT BDI COMPT-WHT SKID	AMP CPC	9	561635	561637
C93	FR JCT BDI COMPT-WHT SKID	ORDMAC	2	------	641874
C96	FR AXLE ACCESSORIES	AMP CPC	14	561595	561595
C97	RR-AXLE ACC-INSIDE PVC END	PED WP	6	561568	561578
C98	FR SERVICE COMPT.-FRESH AIR	SEALITE ST	2	561813	561812
C99	FR SERVICE COMPT.-FRESH AIR	SEALITE ST	2	561813	561812
C156	EVAPORATOR-BI-PVC-END-CAPS	PED WP	2	561566	561560
C157	EVAPORATOR COMPT-WATER PUMP	PED WP	2	561566	561560
C158	EVAPORATOR COMPT-FT-FLAPS-LH	TT1 SS	2	561813	561812
C159	CONDENSER COMPT-I-A/C HEATERS	TT1 SS	2	561813	561812 PRIOR R201
C160	FR-AXLE-ABS-RH-VALVE	W48CO	3	------	641298
C161	FR-AXLE-ABS-RH-VALVE	W48CO	3	------	641298
C162	FR-AXLE-ABS-LH-SENSOR	W48CO	3	641224	641245
C163	FR-AXLE-ABS-LH-VALVE	W48CO	3	------	641298
C164	FR-AXLE-ABS-LH-VALVE	W48CO	3	------	641298
C166	FR-AXLE-ABS-RH-VALVE	W48CO	3	------	641298
C167	FR-AXLE-ABS-RH-SENSOR	W48CO	3	641224	641245
C168	FR-AXLE-ABS-PT ATC	PED WP	2	561566	561560
C169	FR JCT BDI-FL	TT1 SS	2	561813	561812
C170	FR JCT BDI-FL-LIGHHER.LIGHT	------	2	------	561768
C171	BATT. & RR JBZ,FT.HAWKER,LT	TT1 SS	2	561813	561812 PRIOR R201
C172	ENGINE COMPT-WATER TANK-HECL	PED WP	2	561566	561560
C173	LAVLPRTABLE-WATER TANK HEAT.	AMP HNL	2	560980	560898
C174	UNDER DASH-RH-VALVE-DRYER	AMP HNL	2	561248	561247
C175	UNDER DASH-RH-WTR HOSE	AMP HNL	9	560661	560662
C176	UNDER DASH-RH-WIPER MOTOR	AMP FF	6	------	561186
C177	UNDER DASH-RH-LH FAN	TC	2	561858	561997
C178	UNDER DASH-RH-FAN	TC	2	561858	561997
C179	RR JCT BDI-RR DIFF-LOCK	AMP CPC	9	560636	560637
C180	RR JCT BDI-RR DIFF-LOCK	AMP CPC	9	560636	560637
C181	FR JCT BDI-DOOR-DRV.LT-PW	ITT SS	2	561813	561812
C182	FR JCT BDI-DOOR-DRV.LT-PW	ITT SS	2	561813	561812
C183	FR JCT BDI-DOOR-DRV.LT-PW	ITT SS	2	561813	561812
C184	ENGINE CPT-ETHER SW	PED WP	2	561566	561560

No.	LOCATION	IND #PIN TYPE	*SOCKET CAVITY	HOUSING	HOUSING
C186	RR JCT BDI-CPT.-SPEED SIDLTR RED	AMP HNL	2	561566	561560
C186A	RR JCT BDI-CPT.-SPD SIDL HLTR RED	AMP HNL	2	561566	561560
C186X	RR JCT BDI-CPT.-SPD SIDL HT RED	AMP HNL	2	561566	561560
C187	FR JCT BDI-RPM RESISTOR COIL	AMP HNL	6	561552	561515
C189	ENGINE CPT-ENGINE-JACOB	TT1 SS	2	561813	561812
C190	ENGINE CPT-RR DOOR FAIL LT	PED WP	2	561566	561560
C191	INSTRUMENT PANEL-TACHOGRAPH	AMP CPC	24	560642	560643
C192	ENGINE CPT-RR DOOR FAIL RT	PED WP	2	561566	561560
C193	FR SEC.L.H-HAT RACK-FLOOR	AMP HNL	2	561248	561247
C194	ENGINE CPT-RR DOOR LH-STOP LT	PED WP	2	561566	561560
C195	ENGINE CPT-RR DOOR LH-STOP LT	PED WP	2	561566	561560
C196	ENGINE CPT-RR DOOR RH-STOP LT	PED WP	2	561566	561560
C197	ENGINE CPT-A/C COMPRESSOR	AMP HNL	2	561889	561890 PRIOR R201
C198	ENGINE CPT-A/C COMPRESSOR	AMP HNL	2	561889	561890 PRIOR R201
C199	ENGINE CPT-RR DOOR-LICENSE-LT	DGH-AUTO	2	*30218	------
C200	ENGINE CPT-RR DOOR-LICENSE-RT	DGH-AUTO	2	*30218	------
C201	RH HAT RACK-BALLAST	AMP HNL	4	560897	560898
C202	RH HAT RACK-BALLAST	AMP HNL	4	560897	560898
C203	RH HAT RACK-BALLAST	AMP HNL	4	560897	560898
C204	RH HAT RACK-GENERAL LT	AMP HNL	3	561667	561558
C205	RH HAT RACK-READING LT	AMP HNL	2	561248	561247
C206	RH HAT RACK-READING LT	AMP HNL	2	561248	561247
C207	LH HAT RACK-BALLAST	AMP HNL	4	560897	560898
C208	LH HAT RACK-BALLAST	AMP HNL	4	560897	560898
C209	LH HAT RACK-BALLAST SPEAKER	AMP HNL	4	560897	560898
C210	RR-FOOT-STEP-LH	AMP HNL	2	561248	561247
C211	RR-FOOT-STEP-RH	AMP HNL	2	561248	561247
C212	RR-FOOT-CLEANER-LT	AMP HNL	2	560980	560898
C216	UNDER DASH-LH-PA	AMP HNL	9	560636	560637
C217	UNDER DASH-LH-PA	AMP HNL	9	------	561558
C218	UNDER DASH-LH-PA	AMP HNL	9	------	561558
C219	UNDER DASH-LH-PA	AMP HNL	9	------	561558
C220	RR JCT BDI-FUEL PRIME PUMP	TC	2	561818	561873
C221	ENGINE CPT-ENGINE-JACOB	TT1 SS	2	561813	561812
C223	ALARM JCT BDI COMPARTMENT	AMP CPC	24	560642	560643
C225	FR SEC.L.RH-HAT RACK-FLOOR	AMP HNL	2	561248	561247
C227	RH HAT PANEL-WTR HEATER	AMP HNL	2	560980	560898
C228	RH SW PANEL-HORD OUTLET	HOLEX	4	561477	561476
C229	ENGINE CPT-FUEL PRIME PUMP	DEUTSCH	2	562950	562951
C230	ENGINE CPT-FUEL PRIME PUMP FEED	DEUTSCH	2	562546	562560
C231	ENGINE CPT-FUEL PRIME PUMP	Sak_TYCO	2	561566	561560
C232	ENGINE CPT-FUEL PRIME PUMP	PED WP	2	561566	561560
C233	INSTRUMENT PANEL-CENTER	VJLL	8	562041	------
C234	INSTRUMENT PANEL-CENTER	VJLL	8	562041	------
C235	INSTRUMENT PANEL-CENTER	VJLL	8	562041	------
C236	UNDER DASH-RH-WTR HOSE	AMP HNL	9	560661	560662
C237	UNDER DASH-LH-JACOB CULTCH SW	TT1 SS	3	561111	561890
C238	A/C ZCT BDI-DODGE CONNECTOR	AMP HNL	9	561678	561680
C239	FR SERVICE CPT-HI BLKD VALVE	PED WP	2	561566	561560
C240	FR SERVICE CPT-WHEEL PRIO SW	PED WP	2	561566	561560
C241	FR SERVICE CPT-HDQ RESISTOR	AMP CPC	3	561847	561862
C242	FR SERVICE CPT-HDQ RESISTOR	AMP CPC	3	561847	561862
C243	FR SERVICE CPT-HDQ RESISTOR	AMP CPC	3	561847	561862
C244	FR SERVICE CPT-LH FOG LAMP	TT1 SS	2	561813	561812
C245	FR SERVICE CPT-RH FOG LAMP	TT1 SS	2	561813	561812
C246	FR SERVICE CPT-HARN & CON.LT	TT1 SS	2	561111	561890
C248	ALARM JCT BDI-WIPER PULSE GEN	AMP FF	2	------	561388
C249	ALARM JCT BDI-CONV. 12V TO 5V	AMP HNL	3	561667	561558

No.	LOCATION	IND #PIN TYPE	*SOCKET CAVITY	HOUSING	HOUSING
C250	ALARM JCT BDI-DASH-LTS REGUL.	AMP HNL	6	561552	561515
C251	LH SW PANEL-FIRST IDLE	SWF	8	------	561387
C252	LH SW PANEL-SWITCH L1	SWF	2	------	561387
C253	LH SW PANEL-ETHER	SWF	8	------	561387
C254	INST. PANEL-RH-EXTR.DOOR SW.	TORRIX	5	------	561387
C255	LH SW PANEL-JACOB	SWF	8	------	561387
C257	INSTRUMENT PANEL-CENT-SPEEDO	AMP HNL	4	560851	560852 PRIOR REV. 018
C258	INSTRUMENT PANEL-TACHOGRAPH	AMP CPC	24	560642	560643
C259	LH SW PANEL-TILT FUEL SW	SWF	8	------	561387
C259	LH SW PANEL-TILT FUEL SW	SWF	8	------	561387
C260	UNDER DASH-RH-DOOR HOOD	AMP HNL	9	561678	561680
C261	UNDER DASH-RH-DOOR HOOD	AMP HNL	9	561678	561680
C262	UNDER DASH-RH-DOOR HOOD	AMP HNL	9	561678	561680
C263	UNDER DASH-RH-DOOR HOOD	AMP HNL	3	561667	561558
C264	UNDER DASH-RH-DOOR HOOD	AMP HNL	3	561667	561558
C265	UNDER DASH-RH-DOOR HOOD	AMP HOP-28	15	562051	562012
C266	UNDER DASH-RH-DOOR HOOD	AMP HOP-28	15	562051	562012
C267	RH HAT RACK-READING LT	AMP HNL	2	561248	561247
C268	RH HAT RACK-BALLAST	AMP HNL	4	560897	560898
C269	RH HAT RACK-BALLAST	AMP HNL	4	560897	560898
C270	RH HAT RACK-BALLAST	AMP HNL	4	560897	560898
C271	RH HAT RACK-BALLAST	AMP HNL	4	560897	560898
C272	RH HORROR	SPARTAN	6	*90058	------
C273	RH HORROR	HOLEX	6	562872	562895
C275	UNDER DASH-RH-DOOR HOOD	AMP HNL	9	561678	561680
C276	UNDER DASH-RH-DOOR HOOD	AMP HNL	9	561678	561680
C277	UNDER DASH-RH-DOOR HOOD	AMP HNL	9	561678	561680
C278	LH HAT RACK-DIFF. LOCK	AMP HNL	2	560980	560898
C279	RH SW PANEL-FIRE SW	SWF	8	------	561387
C280	RH SW PANEL-SWITCH L	SWF	2	------	561387
C281	RH SW PANEL-VIDEO SYST.	AMP CPC	2	561639	561640
C283	RH SW PANEL-WATER TEMP SW	AMP HNL	3	561667	561558
C284	RH SW PANEL-FUEL SW	AMP HNL	3	561667	561558
C285	RH SW PANEL-CENT-TAC & SPD L	AMP HNL	2	560980	560898 PRIOR R.018
C286	RH SW PANEL-SWITCH L	SWF	2	------	561387
C287	RH ROOF-LAMP-DOOR-CLEAT	AMP HNL	2	561248	561247
C288	RH ROOF-WATCH-YOUR STEP L	AMP HNL	2	561248	561247
C289	RH ROOF-LAMP-DOOR-CLEAT	AMP HNL	2	561248	561247
C290	RH ROOF-WINDSHIELD DEFROST	AMP HNL	3	561667	561558
C291	RH ROOF-WINDSHIELD DEFROST	AMP HNL	3	561667	561558
C292	RH ROOF-DEF.CEL.T SENSOR	PED WP	2	561566	561560
C293	RH ROOF-DEF.SIDW.SIDL.-RH	AMP HNL	3	561667	561558
C294	RH ROOF-DEST.SIDW.DRV. TORRIX	5	------	561387	------
C295	RH ROOF-DEST.SIDW.PASS.	AMP HNL	2	560980	560898
C296	RH ROOF-DEST.SIDW.FLUORS.	AMP HNL	2	560980	560898
C297	RH ROOF-DEST.SIDW.SPEED SW	HOLEX	4	561477	561476
C298	RH ROOF-DEST.SIDW.PASS.-RH	AMP HNL	3	561667	561558
C299	RH ROOF-DEST.SIDW.FLUORS.	AMP HNL	3	561667	561558
C300	LH CONSOLE-CTR.HARDR	DEUTSCH	6	562960	------
C301	ALARM JCT BDI-HVC W/O WIRE	DEUTSCH	6	562248	562247
C302	LH CONSOLE-FILTER-CONTROL	AMP CPC	2	561639	561640
C303	LH CONSOLE-WIL POWER SYSTEM	SWF	8	------	561387
C304	DDEC ENGINE-EDYI	PED	30	------	561608

No.	LOCATION	IND #PIN TYPE	*SOCKET CAVITY	HOUSING	HOUSING
C305	LH CONSOLE SW-KNEELING	SWF	8	------	561387
C306	LH CONSOLE SW-SPARE	SWF	8	------	561387
C307	ENGINE CONTROL-RR START SW BDI	DEUTSCH	5	562565	562566 PRIOR R201
C308	ENGINE CONTROL-RR START SW	DEUTSCH	6	562563	562566
C309	GALLEY-LAMP	AMP HNL	2	561248	561247
C310	GALLEY-LIGHT SIGNAL	AMP HNL	2	561248	561247
C330	GALLEY-MICROWAVE SW.LT	SWF	2	------	561837
C331	GALLEY-FAN SW.LT	SWF	2	------	561837
C333	GALLEY-RH CONTAINER SW.LT	SWF	2	------	561837
C334	GALLEY-LH CONTAINER SW.LT	SWF	2	------	561837
C335	GALLEY-LH CONTAINER SW.LT	SWF	2	------	561837
C336	GALLEY-RH CONTAINER SW.LT	SWF	2	------	561837
C337	ENGINE CONTROL-BLOCK HEATER	PED WP	2	561566	561560
C338	ALARM JCT BDI-LH-UP DEFROST SW	SWF	2	------	561837
C339	ALARM JCT BDI-RH-UP DEFROST SW	SWF	2	------	561837
C340	ALARM JCT BDI-CONV.	AMP HNL	2	560980	560898
C341	ALARM JCT BDI-CONV.	AMP HNL	2	------	561558
C342	RR JCT BDI-CONTROL-SW	DEUTSCH	2	562566	562560
C343	INSTR PANEL-LH-HEADLAMP SW	SWF	2	------	561837
C344	INSTR PANEL-LH-FOG LT SW	SWF	2	------	561837
C345	INSTR PANEL-LH-FOG LT SW	SWF	2	------	561837
C346	INSTR PANEL-LH-FOG LT SW	SWF	2	------	561837
C347	INSTR PANEL-LH-GEN.LT SW	AMP HNL	2	560980	560898
C348	INSTR PANEL-LH-GEN.LT SW	AMP HNL	2	560847	560858
C349	RH CONSOLE-MED.LED HTR	AMP HNL	2	561248	561247
C350	RH CONSOLE-MED.LED HTR	AMP HNL	2	560980	560898
C351	LH HAT RACK-DIFF. LOCK	AMP HNL	2	561248	561247
C352	RH CONSOLE-CEIM-TEMP SENSOR	BURNDY	4	------	561184
C353	RH SW PANEL-FIRE SW	AMP HNL	3	561667	561558
C354	INSTR PANEL-RH-DRV TEMP CTR	AMP HNL	3	561552	561515
C355	INSTR PANEL-RH-DRV.DOOR	AMP HNL	3	561552	561515
C357	INSTR PANEL-RH-WATER TEMP SW	AMP HNL	3	561552	561515
C358	INSTR PANEL-RH-FUEL SW	AMP HNL	3	561552	561515
C359	INSTR PANEL-CENT-TAC & SPD L	AMP HNL	2	560980	560898 PRIOR R.018
C360	RR JCT BDI-DIFF-LOCK	AMP CPC	9	560636	560637
C361	FR ROOF-LAMP-DOOR-CLEAT	AMP HNL	2	561248	561247
C362	FR ROOF-WATCH-YOUR STEP L	AMP HNL	2	561248	561247
C363	FR ROOF-LAMP-DOOR-CLEAT	AMP HNL	2	561248	561247
C365	FR ROOF-UP WINDSHIELD DEFROST	AMP HNL	3	561667	561558
C366	FR ROOF-UP WINDSHIELD DEFROST	AMP HNL	3	561667	561558
C367	ENGINE CPT-DEF.CEL.T SENSOR	PED WP	2	561566	561560
C368	FR ROOF-DEST.SIDW.SIDL.-RH	AMP HNL	3	561667	561558
C369	FR ROOF-DEST.SIDW.DRV. TORRIX	5	------	561387	------
C370	FR ROOF-DEST.SIDW.PASS.	AMP HNL	2	560980	560898
C371	FR ROOF-DEST.SIDW.FLUORS.	AMP HNL	2	560980	560898
C372	FR ROOF-DEST.SIDW.SPEED SW	HOLEX	4	561477	561476
C373	ALARM JCT BDI-CONV.-FT-DEST.SW	AMP HNL	4	561552	561515
C375	ALARM JCT BDI COMPT-LH CONSOL	AMP HNL	6	561552	561515
C376	ALARM JCT BDI COMPT-LH CONS.	AMP CPC	2	561639	561640
C377	LH SW PANEL-STOP ENGINEDRIVE	SWF	8	------	561387
C378	LH CONSOLE-CDR CONNECTOR	DEUTSCH	6	562960	------
C380	ALARM JCT BDI-CONV.-FT-DEST.SW	AMP HNL	4	561552	561515
C381	FILTER-CONTROL	AMP CPC	2	561639	561640
C382	RR JCT BDI-WCL	AMP HNL	3	561667	561558

No.	LOCATION	IND #PIN TYPE	*SOCKET CAVITY	HOUSING	HOUSING
C388	RR JCT BDI-WCL	AMP HNL	12	561735	561734
C389	WCL REAR DOOR	HOLEX	4	561477	561476
C390	LAVATORY-WALL-WCL REMOTE CTR	SWF	8	------	561187
C391	LAVATORY-WALL-WCL	SWF	8	------	561187
C392	LAVATORY-WALL-WCL SW.L	TE & BET	18	------	561835
C393	LAVATORY-WALL-WCL REMOTE STL	AMP CPC	4	561686	561687
C394	LAVATORY-WALL-WCL-HOT WATER	AMP HNL	4	560851	560852
C395	DROP-CEILING-WALL-LAVATORY	AMP HNL	2	561248	561247
C396	FR SEC.L.H-HAT RACK-FLOOR	AMP HNL	2	561248	561247
C397	ENGINE COMPT.-FRONT-CLEAT	HOLEX	4	562295	562284
C398	FR SEC.L.H-HAT RACK-AMPL1	HOLEX	6	------	562464
C399	FR SEC.L.H-HAT RACK-AMPL1	HOLEX	6	562445	562445
C400	ENGINE COMPT.-BLOCK-HEATER	PED WP	2	561566	561560
C401	FR SEC.L.H-HAT RACK-AMPL1	HOLEX	6	562445	562447
C402	WORLD TRANSFL-RETARD SOL.*	PED WP	2	------	562426
C403	WORLD TRANSFL-SENSOR CONN.	DEUTSCH	16	562570	562571
C404	RR JCT BDI-DDL CONN.KIT	PED WP	12	------	562574
C405	LH CONSOLE-CDR CONNECTOR	T & BET	18	------	562429
C406	FR SERVICE CPT.-RESIS.HOL.	PED WP	3	------	562428
C407	FR SERVICE CPT.-RESIS.HOL.	PED WP	3	------	562428
C408	FR SERVICE CPT.-SLIDE 1000	PED WP	2	------	561566
C409	FR SERVICE CPT.-SLIDE 1000	PED WP	2	561566	561560
C410	FR SERVICE CPT.-SLIDE 1000	PED WP	2	561566	561560
C411	FR SERVICE CPT.-SLIDE 1000	PED WP	2	561566	561560
C412	FR SERVICE CPT.-SLIDE 1000	PED WP	2	561566	561560
C413	FR SERVICE CPT.-TEMP.SENSOR	AMP HNL	2	561247	561248
C414	FR SEC.L.H-HAT RACK-AMPL1	HOLEX	6	562445	562447
C415	RR JCT BDI-SPEED SIDN CONNECTOR	HOLEX	6	562918	562906
C416	RR JCT BDI-SPEED SIDN CONNECTOR	HOLEX	6	562918	562906
C417	RR JCT BDI-SPEED SIDN WORLD TRANS	HOLEX	6	562918	562906
C418	RR JCT BDI-VTM WORLD TRANSM.	AMP CPC	16	560639	560640
C419	ENGINE CPT-ELECTRONIC DIST.-LAMP	AMP CPC	9	560636	560637
C420	ELECTRONIC DESTINATION SIGN	AMP CPC	9	561636	560637
C421	ENGINE CPT-RR DOOR-PRIORITY	HOLEX	6	562872	562895
C422	RR JCT BDI-DODGE CONNECTOR	AMP HNL	6	561678	561680
C423	LH CONSOLE-PROPRIVER HOLDER	HOLEX	2	------	562433
C424	LH CONSOLE-PRE-HEATER	SWF	2	------	561837
C425	LH CONSOLE-PRE-HEATER SW.	SWF	2	------	561837
C426	ALARM JCT BDI COMPT.ETAT-SIDE	AMP HNL	2	561248	561247
C427	ALARM JCT BDI COMPT.ETAT-CLOCK	AMP HNL	2	561248	561247
C428	INSTR PANEL-LH-HTR WINDOWSW	SWF	2	------	561837
C429	INSTR PANEL-LH-HTR WINDOWSW	SWF	2	------	561837
C430	ENGINE COMPT.-WEBASTO WATER HTR	TC	2	561997	------
C431	ENGINE COMPT.-WEBASTO WATER HTR	TC	2	561997	------
C432	ENGINE COMPT.-WEBASTO WATER HTR	TC	2	561997	------
C433	UNDER DASH-RH-DOOR HOOD	AMP HNL	9	561678	561680
C434	UNDER DASH-RH-DOOR HOOD	AMP HNL	9	561678	561680
C435	ALARM JCT BDI-CONT.-FT-DEST.SW	AMP HNL	3	561667	561558
C436	ALARM JCT BDI-CONT-TIMER	AMP FF	6	561188	561363
C437	ALARM JCT

CONNECTORS (CODE ID) Page G:1

No.	LOCATION	INB/ MPN/ *SOCKET TYPE	CAVITY	HOUSING	HOUSING
C1	FR JCT BOX COMPARTMENT	AMP CPC	37	560644	560646
C2	FR JCT BOX COMPARTMENT	AMP CPC	24	560641	560643
C3	FR JCT BOX COMPARTMENT	AMP CPC	37	560714	560713
C4	FR JCT BOX COMPARTMENT	AMP CPC	16	560493	560495
C5	FR SERVICE COMPT.-UNDERNEATH	AMP CPC	37	560644	560646
C6	FR SERVICE COMPT.-UNDERNEATH	AMP CPC	24	560641	560643
C7	FR JCT BOX COMPT.-UNDERNEATH	AMP CPC	37	560714	560716
C8	FR SERVICE COMPT.-UNDERNEATH	AMP CPC	37	560714	560713
C9	ALARM JCT BOX	AMP CPC	16	560493	560495
C10	ALARM JCT BOX	AMP CPC	37	560644	560646
C11	FR SERVICE COMPARTMENT	AMP CPC	24	560642	560643
C12	FR SERVICE COMPARTMENT	AMP CPC	24	560642	560643
C13	LH CONSOLE-HEATER MTR.	AMP HNL	2	561248	561247
C13	FR SERVICE COMPT.	AMP HNL	6	560552	560555
C13	LH CONSOLE-CTR.HARDR	AMP HNL	6	560552	560555
C14	UNDER DASH-LH MIRROR	AMP HNL	2	561248	561247
C15	RR JCT BOX	AMP CPC	24	560642	560643
C15	UNDER DASH-RH MIRROR	AMP CPC	24	560642	560643
C16	LH CONSOLE SW-CRUISE DO OFF	SWF	8	------	561087
C17	LH CONSOLE SW-CRUISE RESUME	SWF	8	------	561087
C18	LH CONSOLE SW-CRUISE SET	SWF	8	------	561087
C20	RR JCT BOX	AMP CPC	37	560644	560646
C21	RR JCT BOX	AMP CPC	24	560641	560643
C26	HYD & HWH TRANSFL-REUT& B-U	PED WP	4	561618	561611
C27	HYD & HWH TRANSFL-SPEED SENS	PED WP	4	561618	561611
C30	DEEC ENGINE-EDYI	PED	30	------	561608
C35	RR JCT BOX	AMP HNL	2	561412	561411
C36	EMERGENCY EXIT LTS	AMP HNL	2	561248	561247
C37	RR SECTION-LH HAT RACK	AMP HNL	9	560661	560662
C38	RR SECTION-RH HAT RACK	AMP HNL	9	560661	560662
C40	RR JCT BOX	AMP CPC	16	560429	560449 PRIOR R021
C41	LAVATORY ROOF FLOORECEIVT	AMP HNL	2	561248	561247
C42	LAVATORY BACK WALL-WTR TANK	AMP HNL	2	562980	560898
C43	LAVATORY BACK WALL-HECESL	AMP HNL	9	560661	560662
C45	ALARM JCT BOX COMPARTMENT	AMP CPC	24	560642	560643
C47	FR SERVICE COMPT.-LOW BLKD	PED WP	4	561618	561611
C49	BATTERIE COMPT.-LH	AMP HNL	2	562248	562247
C50	FR SERVICE COMPT.-LOW BLKD	PED WP	4	561625	561577
C52	RR JCT BOX	AMP CPC	22	561791	561718
C53	RR JCT BOX	AMP CPC	14	561585	561584 PRIOR R021
C54	UNDER DASH-RH UNIT	TT SS	2	561183	561182 PRIOR R026
C55	UNDER DASH-RH SW PANEL	AMP CPC	9	560636	560637
C56	UNDER DASH-RH CONSOLE	AMP CPC	24	560642	560643
C57	UNDER DASH-RH ACCESSORIES	AMP CPC	22	561791	561718
C58	FR SERVICE COMPARTMENT	AMP CPC	16	560429	560449
C59	EVAPORATOR COMPARTMENT	AMP CPC	16	560429	560449
C60	RR JCT BOX COMPT.-LT	AMP HNL	2	562248	562247
C61	LUGGAGE COMPARTMENT-LTS	AMP HNL	2	562248	562247
C62	LUGGAGE COMPARTMENT-LTS	AMP HNL	2	562248	562247
C63	LUGGAGE COMPARTMENT-LTS	AMP HNL	2	562248	562247
C64	LUGGAGE COMPARTMENT-LTS	AMP HNL	2	562248	562247
C65	LUGGAGE COMPARTMENT-LTS	AMP HNL	2	562248	562247
C66	LUGGAGE COMPARTMENT-LTS	AMP HNL	2	562248	562247
C67	LUGGAGE COMPARTMENT-LTS	AMP HNL	2	562248	562247
C68	LUGGAGE COMPARTMENT-LTS	AMP HNL	2	562248	562247
C69	RR AISLE ACC-INSIDE PVC ENC	PED WP	6	561568	561578

CONNECTORS (CODE ID) Page G:1

No.	LOCATION	INB/ MPN/ *SOCKET TYPE	CAVITY	HOUSING	HOUSING
C70	ALARM JCT BOX COMPARTMENT	AMP CPC	24	560642	560643
C71	UNDER INSTRUMENT PANEL-LH	AMP CPC	37	560645	560646
C72	UNDER INSTRUMENT PANEL-CENT.	AMP CPC	37	560645	560646
C73	UNDER INSTRUMENT PANEL-CENT.	AMP CPC	16	560639	560640
C75	UNDER INSTRUMENT PANEL-RH	AMP CPC	24	560642	560643
C76	ALARM JCT BOX COMPARTMENT	PED WP	4	561618	561611
C77	LUGGAGE COMPT.-AIR REF.SENS.	AMP HNL	2	562148	562147
C78	LUGGAGE COMPT.-AIR REF.SENS.	AMP HNL	2	562148	562147
C79	LUGGAGE COMPT.-AIR REF.SENS.	AMP HNL	2	562148	562147
C80	LUGGAGE COMPT.-AIR REF.SENS.	AMP HNL	2	562148	562147
C81	PASSENGER COMPT.-HOLE LTS	AMP HNL	2	561248	561247
C82	ENTRANCE DOOR	HOLEX	6	562078	562069
C83	ENTRANCE DOOR-PRIORITY SW	HOLEX	2	561477	561476
C84	ENTRANCE DOOR-PRESSURE SW	PED WP	2	561566	561560
C85	UNDER INSTRUMENT PANEL-LH	AMP HNL	2	562148	562147
C86	RR ROOF-CLEARANCE LTS	AMP HNL	2	561248	561247
C87	RR ROOF-CLEARANCE LTS	AMP HNL	2	562980	560898
C88	RR JCT BOX-OTH-RR LIGHTS	AMP CPC	4	560582	560581
C90	RR JCT BOX	AMP CPC	15	561987	561986
C91	RR JCT BOX	PED WP	2	561714	561707
C92	FR JCT BOX COMPT-WHT SKID	AMP CPC	9	561635	561637
C93	FR JCT BOX COMPT-WHT SKID	AMP CPC	2	560643	560641
C96	FR AXLE ACCESSORIES	AMP CPC	14	561585	561585
C97	FR AXLE ACC-INSIDE PVC ENC	PED WP	6	561568	561578
C98	FR SERVICE COMPT.-ELEP.PEDAL	PED WP	2	561766	561761
C99	FR SERVICE COMPT.-ELEP.PEDAL	PED WP	2	561766	561761
C100	EVAPORATOR COMPT.-WATER VAL.	PED WP	2	561566	561560
C101	FR SERVICE COMPT.-ELEC.HORNS	PED WP	2	561566	561560
C102	FR SERVICE & SIDE CPT.-FLASH.L	TT SS	2	561813	561812
C103	FR SERVICE & SIDE CPT.-MARKERS	TT SS	2	561813	561812 PRIOR R021
C104	FR SERVICE & SIDE CPT.-MARKERS	GROTE	2	560255	560255
C105	FR SERVICE & SIDE CPT.-FLASH.RH	TT SS	2	561813	561812 PRIOR R021
C106	FR SERVICE COMPT.-FLASH.LH	WABCO	3	560660	560661
C107	FR SERVICE COMPT.-SLS,SLV,ALVE	PED WP	2	561566	561560
C108	FR SERVICE COMPT.-SLS,SLV,ALVE	PED WP	2	561566	561560
C109	EVAPORATOR COMPT.-SUMPER	AMP CPC	2	561566	561560
C110	FR SERVICE COMPT.-KNEELS,SYS	PED WP	2	561566	561560
C111	FR SERVICE COMPT.-KNEELS,SYS	PED WP	2	561566	561560
C112	FR SERVICE COMPT.-KNEELS,SYS	PED WP	2	561566	561560
C113	EVAPORATOR COMPT.-SUMPER	DEUTSCH	2	562168	562485
C114	EVAPORATOR COMPT.-SUMPER	DEUTSCH	2	562168	562485
C115	FR SERVICE COMPT.-HANDLES,LTS	TT SS	2	561813	561812 PRIOR R021
C116	BATT.& RR JUNCT.CHARGER,LT	DRISTA	2	561813	561812 PRIOR R021
C117	RR JUNCT.BOX-DOOR CONT.LH	TT SS	2	561813	561812
C118	RR JUNCT.BOX-DOOR CONT.LH	GROTE	2	562255	
C119	ENGINE COMPT.-VAPT.DRYER	PED WP	2	561566	561560
C120	ENGINE COMPT.-LTS	PED WP	2	561566	561560 PRIOR R021
C121	ENGINE COMPT.-LTS	PED WP	2	561685	561577
C122	ENGINE COMPT.-LAVATORY FAN	TC	2	560350	560797
C123	ENGINE COMPT.-RR DOOR LH,LIGHT	PED WP	2	561566	561560
C124	ENGINE COMPT.-RR DOOR LH,LIGHT	PED WP	2	561566	561560
C125	ENGINE COMPT.-RR DOOR LH,LIGHT	PED WP	2	561566	561560
C126	ENGINE COMPT.-LT-LIGHTING	AMP HNL	2	561248	561247
C127	ENGINE COMPT.-FUEL FILTER	PED WP	2	561566	561560
C128	ENGINE COMPT.-V-C COMPR.CLUTCH	ITT SS	2	561813	561812
C129	UNDER INSTRUMENT PANEL-RH	AMP CPC	24	560642	560643
C130	ENGINE COMPT.-UNLOADER	ITT SS	2	561813	561812
C131	LUGGAGE COMPT.-HUB,SENS.	AMP HNL	2	562148	562147
C132	LUGGAGE COMPT.-HUB,SENS.	AMP HNL	2	562148	562147
C133	FR SERVICE COMPT.-PRESS SW	PED WP	2	561566	561560
C134	FR SERVICE COMPT.-UNDERNEATH	AMP HNL	15	561987	561986
C135	FR JCT BOX-LUGGAGE DOOR CON.	AMP HNL	15	561987	561986
C136	A/C JCT BOX-TRANSMITTER	AMP HNL	2	562980	560898
C137	A/C JCT BOX-TRANSMITTER	AMP HNL	2	562980	560898
C138	A/C JCT BOX-L.DOOR MODULE	AMP HCP	15	562021	
C139	A/C JCT BOX-L.DOOR MODULE	AMP HCP	15	562021	
C140	LIGHTER DOME WIRE	AMP HNL	2	561248	561247
C141	UNDER DASH-RH HOOD	AMP HNL	2	562980	560898
C142	UNDER DASH-RH HOOD	AMP HNL	2	562980	560898
C143	ENGINE COMPT.-MODULATOR VALVE	AMPHENOL	2	------	560412
C144	ENGINE COMPT.-MODULATOR VALVE	AMPHENOL	2	------	560412
C145	FR JCT BOX	PED WP	2	561566	561560
C146	FR JCT BOX COMPT-WHT SKID	AMP CPC	9	561635	561637
C147	FR JCT BOX COMPT-WHT SKID	AMP CPC	2	560255	560255
C148	FR AXLE ACCESSORIES	AMP CPC	14	561585	561585
C149	FR AXLE ACC-INSIDE PVC ENC	PED WP	6	561568	561578
C150	FR SERVICE COMPT.-ELEP.PEDAL	PED WP	2	561766	561761
C151	FR SERVICE COMPT.-ELEP.PEDAL	PED WP	2	561766	561761
C152	EVAPORATOR COMPT.-WATER VAL.	PED WP	2	561566	561560
C153	FR SERVICE COMPT.-ELEC.HORNS	PED WP	2	561566	561560
C154	FR SERVICE & SIDE CPT.-FLASH.L	TT SS	2	561813	561812
C155	CONDENSER CPT.-V-C LO TEMP.	PED WP	2	561566	561560
C156	FR SERVICE & SIDE CPT.-MARKERS	GROTE	2	560255	560255
C157	FR SERVICE & SIDE CPT.-FLASH.RH	TT SS	2	561813	561812 PRIOR R021
C158	FR AXLE-ABS-LH SENSOR	WABCO	2	641192	
C159	FR AXLE-ABS-LH SOLENOID	WABCO	2	641193	
C160	FR AXLE-ABS-LH VALVE	WABCO	3	560660	560661
C161	FR AXLE-ABS-LH VALVE	WABCO	3	560660	560661
C162	FR AXLE-ABS-LH VALVE	WABCO	3	------	641198
C163	FR AXLE-ABS-LH VALVE	WABCO	3	------	641198
C164	FR AXLE-ABS-LH VALVE	WABCO	3	------	641198
C165	FR AXLE-ABS-LH VALVE	WABCO	3	------	641198
C166	FR AXLE-ABS-LH VALVE	WABCO	3	------	641198
C167	FR AXLE-ABS-LH SENSOR	DEUTSCH	2	562486	562485
C168	RR AXLE-ABS-LH SENSOR	WABCO	2	641192	
C169	RR JCT BOX-SPEED SW	AMP-HCP	15	------	562022
C170	EVAPORATOR COMPT.-SUMPER	PED WP	2	561566	561560
C171	EVAPORATOR COMPT.-SUMPER	PED WP	2	561566	561560
C172	FR SERVICE COMPT.-HANDLES,LTS	TT SS	2	561813	561812 PRIOR R021
C173	BATT.& RR JUNCT.CHARGER,LT	DRISTA	2	561813	561812 PRIOR R021
C174	RR JUNCT.BOX-DOOR CONT.LH	TT SS	2	561813	561812
C175	RR JUNCT.BOX-DOOR CONT.LH	GROTE	2	562255	
C176	ENGINE COMPT.-LTS	PED WP	2	561566	561560 PRIOR R021
C177	ENGINE COMPT.-LTS	PED WP	2	561685	561577
C178	ENGINE COMPT.-LAVATORY FAN	TC	2	560350	560797
C179	ENGINE COMPT.-RR DOOR LH,LIGHT	PED WP	2	561566	561560
C180	ENGINE COMPT.-RR DOOR LH,LIGHT	PED WP	2	561566	561560
C181	ENGINE COMPT.-RR DOOR LH,LIGHT	PED WP	2	561566	561560 PRIOR R021
C182	BATTERIE COMPT.-DOOR LT RH	ITT SS	2	561813	561812
C183	BATTERIE COMPT.-DOOR LT RH	ITT SS	2	561813	561812
C184	ENGINE COMPT.-CAMERA DOOR VALVE	PED WP	2	561566	561560
C185	RR TAIL AXLE-RH VALVE	PED WP	2	561566	561560
C186	ENGINE COMPT.-ETHER SW	PED WP	2	561566	561560

CONNECTORS (CODE ID) Page G:2

No.	LOCATION	INB/ MPN/ *SOCKET TYPE	CAVITY	HOUSING	HOUSING
C187	ENGINE COMPT.-SPEED SIDA,TR RDY	PED WP	2	561566	561560
C188	RR JCT BOX-CPT.-SPD SIGN,HLTR	PED WP	2	561566	561560
C189	RR JCT BOX-CPT.-SPD SIGN,WT	PED WP	2	561566	561560
C190	FR JCT BOX-RH RESISTOR COIL	AMP HNL	6	561552	561515
C191	ENGINE COMPT.-SWITCH	PED WP	2	561566	561560
C192	ENGINE COMPT.-RR DOOR FAIL,LT	PED WP	2	561566	561560
C193	ENGINE COMPT.-DIST-TAC.SIG	PED WP	2	561566	561560
C194	ENGINE COMPT.-RR DOOR LH,LIGHT	PED WP	2	561566	561560
C195	FR SEC.L.H-HAT RACK-FLOOR	AMP HNL	2	562148	562147
C196	ENGINE COMPT.-RR DOOR LH,STOP	PED WP	2	561566	561560
C197	ENGINE COMPT.-RR DOOR LH,STOP	PED WP	2	561566	561560
C198	ENGINE COMPT.-RR DOOR LH,STOP	PED WP	2	561566	561560
C199	ENGINE COMPT.-RR DOOR LH,STOP	PED WP	2	561566	561560
C200	A/C JCT BOX-DOOR CONTACTOR	AMP HNL	2	561885	561890 PRIOR R021
C201	A/C JCT BOX-DOOR CONTACTOR	AMP HNL	2	561885	561890 PRIOR R021
C202	A/C JCT BOX-L.DOOR MODULE	AMP HCP	15	562021	
C203	LIGHTER DOME WIRE	AMP HNL	2	561248	561247
C204	RH HAT RACK-RIGHT LIGHT	AMP HNL	2	562980	560898
C205	RH HAT RACK-RIGHT LIGHT	AMP HNL	2	562980	560898
C206	UNDER DASH-LH-PA	AMP HNL	9	560636	560637
C207	UNDER DASH-LH-PA	AMP HNL	9	560636	560637
C208	UNDER DASH-LH-PA	AMP HNL	9	560636	560637
C209	UNDER DASH-LH-PA	AMP HNL	9	560636	560637
C210	UNDER DASH-LH-PA	AMP HNL	9	560636	560637
C211	UNDER DASH-LH-PA	AMP HNL	9	560636	560637
C212	UNDER DASH-LH-PA	AMP HNL	9	560636	560637
C213	RH ROOF-STORE-LH	AMP HNL	2	562980	560898
C214	RH ROOF-STORE-LH	AMP HNL	2	562980	560898
C215	RH ROOF-STORE-LH	AMP HNL	2	562980	560898
C216	UNDER DASH-LH-PA	AMP HNL	9	560636	560637
C217	UNDER DASH-LH-PA	AMP HNL	9	560636	560637
C218	UNDER DASH-LH-PA	AMP HNL	9	560636	560637
C219	UNDER DASH-LH-PA	AMP HNL	9	560636	560637
C220	RR JCT BOX-FUEL PRIME PUMP	TC	1	560810	560873
C221	RR JCT BOX-FUEL PRIME PUMP	TC	1	560810	560873
C222	UNDER DASH-RH-PA	AMP HNL	9	560636	560637
C223	FR SEC.L.H-HAT RACK-FLOOR	AMP HNL	2	562148	562147
C227	RH HAT RACK-LIGHT	AMP HNL	2	562980	560898
C228	RH SW PANEL-HORD OUTLET	HOLEX	4	561477	561476
C229	RH SW PANEL-PA MIC.HOLDER	HOLEX	4	561477	561476
C230	ENGCPT.-FUEL PRIME PUMP FEED	DEUTSCH	2	562168	562485
C231	ENGCPT.-FUEL PRIME PUMP	PED WP	2	561566	561560
C232	ENGCPT.-FUEL PRIME PUMP	PED WP	2	561566	561560
C233	ENGCPT.-FUEL PRIME PUMP	PED WP	2	561566	561560
C234	INSTRUMENT PANEL CENTER	VJULL	8	562041	
C235	INSTRUMENT PANEL CENTER	VJULL	8	562041	
C236	UNDER DASH-LH-JACOB CLUTCH SW	ITT SS	3	561111	561880
C237	UNDER DASH-LH-JACOB CLUTCH SW	ITT SS	3	561111	561880
C238	A/C JCT BOX-DOOR CONNECTOR	AMP HNL	15	561987	561986
C239	FR SERVICE CPT-HD BUCY VALVE	PED WP	2	561566	561560
C240	FR SERVICE CPT-KNEEL PRIO SW	PED WP	2	561566	561560
C241	FR SERVICE CPT-FOG RESISTOR	AMP CPC	3	561847	561862
C242	FR SERVICE CPT-HD BUCY VALVE	PED WP	2	561566	561560
C243	FR SERVICE CPT-HD BUCY VALVE	PED WP	2	561566	561560
C244	FR SERVICE CPT-LH FOG LAMP	ITT SS	2	561813	561812
C245	FR SERVICE CPT-LH FOG LAMP	ITT SS	2	561813	561812
C246	FR SERVICE CPT-HARN & CON.T	ITT SS	3	561111	561880
C247	FR SERVICE CPT-WIPER PULSE GEN	AMP HNL	2	561248	561247
C249	ALARM JCT BOX-CONV. 12V TO 5V	AMP HNL	3	561667	561550

CONNECTORS (CODE ID) Page G:3

No.	LOCATION	INB/ MPN/ *SOCKET TYPE	CAVITY	HOUSING	HOUSING
C250	ALARM JCT BOX-LIGHTS REGUL.	AMP HNL	4	560552	561515
C251	LH SW PANEL-FIRST IDLE	SWF	8	------	561087
C252	LH SW PANEL-SWITCH L	SWF	8	------	561087
C253	LH SW PANEL-ETHER	SWF	8	------	561087
C254	INST. PANEL-RH ENTR.DOOR SW.	TORRIX	5	------	560255
C255	LH SW PANEL-JACOB	SWF	8	------	561087
C257	INSTRUMENT PANEL CENT-SPEED	AMP HNL	4	560851	560852 PRIOR REV. B18
C258	INSTRUMENT PANEL CENT-TAC.SIG	AMP HNL	4	560851	560852
C259	LH SW PANEL-HLT FUEL SW	SWF	8	------	561087
C260	FR SEC.L.H-HAT RACK-FLOOR	AMP HNL	2	562148	562147
C261	UNDER DASH-RH DOOR HOOLE	AMP HNL	9	561618	561611
C262	UNDER DASH-RH DOOR HOOLE	AMP HNL	9	561618	561611
C263	UNDER DASH-RH DOOR HOOLE	AMP HNL	9	561618	561611
C264	UNDER DASH-RH DOOR HOOLE	AMP HNL	9	561618	561611
C265	UNDER DASH-RH DOOR HOOLE	AMP HNL	9	561618	561611
C266	UNDER DASH-RH DOOR HOOLE	AMP HNL	9	561618	561611
C267	UNDER DASH-RH DOOR HOOLE	AMP HNL	9	561618	561611
C268	UNDER DASH-RH DOOR HOOLE	AMP HNL	9	561618	561611
C269	UNDER DASH-RH DOOR HOOLE	AMP HNL	9	561618	561611
C270	UNDER DASH-RH DOOR HOOLE	AMP HNL	9	561618	561611
C271	RH HORROR	SPARTAN	6	------	990058
C272	RH HORROR	SPARTAN	6	------	990058
C273	RH HORROR POST	HOLEX	6	562072	562069
C274	RH HORROR POST	HOLEX	6	562072	562069
C275	RH HORROR	SPARTAN	6	------	990058
C276	UNDER DASH-RH DOOR HOOLE	AMP HNL	9	561618	561611
C277	UNDER DASH-RH DOOR HOOLE	AMP HNL	9	561618	561611
C278	UNDER DASH-RH DOOR HOOLE	AMP HNL	9	561618	561611
C279	UNDER DASH-RH DOOR HOOLE	AMP HNL	9	561618	561611
C280	UNDER DASH-RH DOOR HOOLE	AMP HNL	9	561618	561611
C281	UNDER DASH-RH DOOR HOOLE	AMP HNL	9	561618	561611
C282	UNDER DASH-RH DOOR HOOLE	AMP HNL	9	561618	561611
C283	UNDER DASH-RH DOOR HOOLE	AMP HNL	9	561618	561611
C284	RH HAT RACK-GENERAL LT	AMP HNL	3	561667	561550
C285	BATT. & RR JUNCT.CHARGER	AMP HNL	2	562148	562147
C286	RH HAT RACK-READING LT	AMP HNL	2	562148	562147
C287	LH CONSOLE-CRUISE SPEAKER	AMP HNL	2	561248	561247
C288	LH HAT RACK-BALLAST	AMP HNL	3	560850	560852
C289	LH HAT RACK-BALLAST SPEAKER	AMP HNL	3	560850	560852
C290	RH ROOF-STORE-LH	AMP HNL	2	562980	560898
C291	RH ROOF-STORE-LH	AMP HNL	2	562980	560898
C293	RH ROOF-STORE-LH	AMP HNL	2	562980	560898
C296	UNDER DASH-LH-PA	AMP HNL	9	560636	560637
C297	UNDER DASH-LH-PA	AMP HNL	9	560636	560637
C298	UNDER DASH-LH-PA	AMP HNL	9	560636	560637
C299	UNDER DASH-LH-PA	AMP HNL	9	560636	560637
C300	UNDER DASH-LH-PA	AMP HNL	9	560636	560637
C301	UNDER DASH-LH-PA	AMP HNL	9	560636	560637
C302	UNDER DASH-LH-PA	AMP HNL	9	560636	560637
C303	UNDER DASH-LH-PA	AMP HNL	9	560636	560637
C304	UNDER DASH-LH-PA	AMP HNL	9	560636	560637
C305	LH CONSOLE SW-KNEELING	SWF	8	------	561087
C306	LH CONSOLE SW-SPARE	SWF	8	------	561087
C307	ENGINE COMPT.-RR START SW BOX	DEUTSCH	5	562565	562566 PRIOR R021
C308	ENGINE CONTROL RR START SW	DEUTSCH	5	562583	562566
C309	GALLEY-LAMP	AMP HNL	2	562248	562247
C310	ENGINE COMPT.-DIST.SW.L.T.	PED WP	2	561566	561560
C330	GALLEY-MICROWAVE SW.L.T.	SWF	2	------	561837
C331	GALLEY-SINK SW.L.T.	SWF	2	------	561837
C332	GALLEY-RH CONTAINER SW.L.T.	SWF	2	------	561837
C333	GALLEY-RH CONTAINER SW.L.T.	SWF	2	------	561837
C334	GALLEY-RH CONTAINER SW.L.T.	SWF	2	------	561837
C335	GALLEY-LH CONTAINER SW.L.T.	SWF	2	------	561837
C336	GALLEY-LH CONTAINER SW.L.T.	SWF	2	------	561837
C337	ENGINE COMPT.-BLOCK HEATER	PED WP	2	561566	561560
C338	ENGINE COMPT.-BLOCK HEATER	PED WP	2	561566	561560
C339	ENGINE COMPT.-BLOCK HEATER	PED WP	2	561566	561560
C340	ALARM JCT.BOX-CONV.	AMP HNL	2	562980	560898
C341	ENGINE COMPT.-RR HORROR	PED WP	2	561566	561560
C342	ENGINE COMPT.-RR HORROR	PED WP	2	561566	561560
C343	INSTR.PANEL-LH-HEADLAMP SW	SWF	8	------	561087
C344	INSTR.PANEL-LH-FOG LT SW	SWF	8	------	561087
C345	INSTR.PANEL-LH-FOG LT SW	SWF	8	------	561087
C346	INSTR.PANEL-LH-DASH LT SW	SWF	8	------	561087
C347	INSTR.PANEL-LH-DASH LT SW	SWF	8	------	561087
C348	RH CONSOLE-RED LED HTR	AMP HNL	2	562148	562147
C349	RH CONSOLE-RED LED HTR	AMP HNL	2	562148	562147
C350	LH HAT RACK-LIGHT	AMP HNL	2	562980	560898
C351	RH CONSOLE-CENTER SENSOR - BURNED		4	561184	
C353	INST.PANEL-RH-DRV.CONTROLS	AMP HNL	15	561987	561986
C354	INST.PANEL-RH-DRV TEMP CTR	AMP HNL	6	561552	561515
C355	INST.PANEL-RH-DRV.DOOR	AMP HNL	6	561552	561515
C357	INST.PANEL-RH-WATER TEMP SW	AMP HNL	3	561667	561550
C358	INST.PANEL-RH-FUEL LVL SW	AMP HNL	3	561667	561550
C359	INST.PANEL CENT-TAC.& SPD.LT	AMP HNL	2	562980	560898 PRIOR R,B18
C360	INST.PANEL-CENT-TAC.SIG	AMP HNL	2	562980	560898
C361	FR ROOF-WATCH HOUR STEP.L	AMP HNL	2	562148	562147
C362	FR ROOF-WATCH HOUR STEP.L	AMP HNL	2	562148	562147
C363	INSTRUMENT PANEL CENT-TAC.SIG	AMP HNL	4	560851	560852 PRIOR REV. B18
C364	INSTRUMENT PANEL CENT-TACHO	AMP HNL	2	------	562363
C365	FR ROOF-UP WINDSHIELD DEFROST	AMP HNL	3	561667	561550
C366	FR ROOF-UP WINDSHIELD DEFROST	AMP HNL	3	561667	561550
C367	FR ROOF-DEST.SIGN DRIVER	TORRIX	5	------	560255
C368	FR ROOF-DEST.SIGN DRIVER	TORRIX	5	------	560255
C369	FR ROOF-DEST.SIGN SPEED SW	HOLEX	4	561477	561476
C370	FR ROOF-DEST.SIGN SPEED SW	HOLEX	4	561477	561476
C371	ALARM JCT BOX-DOOR CONTACTOR	AMP HNL	2	561885	561890 PRIOR R021
C372	ALARM JCT BOX-DOOR CONTACTOR	AMP HNL	2	561885	561890 PRIOR R021
C373	ALARM JCT BOX-INSTER SW.AMP HNL		6	561552	561515
C374	ALARM JCT BOX-DOOR CONTACTOR	AMP HNL	2	561885	561890 PRIOR R021
C375	ALARM JCT BOX-CONV.LH CONSOL	AMP HNL	2	561552	561515
C376	LH CONSOLE-LH STORE	SWF	8	------	561087
C377	LH SW PANEL-STOP ENGINEERGE	SWF	8	------	561087
C378	LH CONSOLE-CDR CONNECTOR	DEUTSCH	6	562362	562487
C379	LH CONSOLE-LH STORE	SWF	8	------	561087
C380	LH CONSOLE-LH STORE	SWF	8	------	561087
C381	LH CONSOLE-VCL POWER SYSTEM	SWF	8	------	561087
C382	RR JCT BOX-VCL	AMP HNL	3	560660	560662

CONNECTORS (CODE ID) Page G:2

| No. | LOCATION | INB/ MPN/ *SOCKET TYPE |

NO.	PAGE	AMP	#PREVOST	LOCATION	FUNCTION
D1	7	3A	561740	ALARM JCT BOX	LO-AIR SONALERT-PRIMARY
D2	7	3A	561740	ALARM JCT BOX	LO-AIR SONALERT-SECONDARY
D4	10	3A	561740	FR JCT BOX	WARNING HAZARD-RH
D5	10	3A	561740	FR JCT BOX	WARNING HAZARD-LH
D9	17	3A	561740	ALARM JCT BOX	HOSTESS & PASSENGER CHIME
D11	23	3A	561740	RR JCT BOX	LAVATORY OCCUPIED SIGN
D12	23	3A	561740	RR JCT BOX	LAVATORY OCCUPIED SIGN
D13	23	3A	561740	FR DEST. SIGN	FR DESTINATION SIGN
D14	23	3A	561740	FR DEST. SIGN	FR DESTINATION SIGN
D15	24	3A	561740	FR JCT BOX	KNEELING SYSTEM CTR-UP
D16	24	3A	561740	FR JCT BOX	KNEELING SYSTEM CTR-DOWN
D17	10	3A	561740	FR JCT BOX	WARNING HAZARD-LH
D18	10	3A	561740	FR JCT BOX	WARNING HAZARD-RH
D19	9	3A	561740	FR JCT BOX	DAYTIME RUN LTS-PARK BRK CALL SW.
D20	9	3A	561740	FR JCT BOX	DAYTIME RUN LTS-HEAD LT SW
D21	24	3A	561740	FR JCT BOX	KNEELING SYSTEM FEED BACK
D25	13	3A	561740	FR JCT BOX	LUGGAGE DOOR AJAR T.T.LT.
D26	13	3A	561740	FR JCT BOX	LUGGAGE DOOR AJAR T.T.LT.
D27	13	3A	561740	FR JCT BOX	LUGGAGE DOOR AJAR T.T.LT.
D28	13	3A	561740	FR JCT BOX	LUGGAGE DOOR AJAR T.T.LT.
D29	13	3A	561740	FR JCT BOX	LUGGAGE DOOR AJAR T.T.LT.
D30	13	3A	561740	FR JCT BOX	LUGGAGE DOOR AJAR T.T.LT.
D31	13	3A	561740	FR JCT BOX	LUGGAGE DOOR AJAR T.T.LT.
D35	32	3A	561740	RR JCT BOX	WCL DOOR AJAR ALARM T.T.LT.
D58	24	3A	561740	FR JCT BOX	RR HIGH BUOY - KNEELING
D60	18	3A	561740	RR JCT BOX	A/C COMPR.CLUTCH SUPPRESSOR
D61	10	3A	561740	FR JCT BOX	KNEELING SIDE FR RH DIRECTIONNAL LT
D62	18	3A	561740	A/C JCT BOX	WATER PUMP FEED
D63	23	3A	561740	ALARM JCT BOX	LAVATORY SONALERT
D64	24	3A	561740	ALARM JCT BOX	KNEELING SONALERT
D65	18	3A	561740	A/C JCT BOX	WATER PUMP - PRE-HEAT FEED
D66	18	3A	561740	A/C JCT BOX	WATER VALVE - HEAT SW. FEED
D67	10	3A	561740	UNDER DASH	AUDIBLE FLASHER RLY - RH
D68	10	3A	561740	UNDER DASH	AUDIBLE FLASHER RLY - LH
D69					
D70	24	3A	561740	FR JCT BOX	FR HIGH BUOY - KNEELING
D71	24	3A	561740	FR JCT BOX	FR HIGH BUOY - KNEELING
D72	24	3A	561740	FR JCT BOX	FR HIGH BUOY - KNEELING
D73	24	3A	561740	FR JCT BOX	FR HIGH BUOY - KNEELING
D74	1	3A	561740	FR JCT BOX	DASH MASTER CUT OUT SW.
D75	4	3A	381351	BAT CPT	STARTER-SUPPRESSOR COIL RLY
D76	29	3A	381351	BAT CPT	INVERTER-SUPPRESSOR COIL RLY
D77	24	3A	561740	FR JCT BOX	PARKING BRAKE - KNEELING
D78	17	3A	561740	LH CONSOLE	PRE-HEAT WATER HEATER SW.
D79	17	3A	561740	LH CONSOLE	PRE-HEAT WATER HEATER SW.
D80	9	3A	561740	FR JCT BOX	DAYTIME RUN LTS-HEAD LTS CALL SW.
D81	24	3A	561740	FR JCT BOX	PIEZO-KNEELING
D82	24	3A	561740	FR JCT BOX	PIEZO-KNEELING

DIODE CODE (D) Page H : 1

NO.	PAGE	AMP	#PREVOST	LOCATION	FUNCTION

LAZER FORMAT "A" ECHELLE 3.2:1

DIODE CODE (D) Page H:1

NO.	PAGE	AMP	#PREVOST	LOCATION	FUNCTION
D1	7	3A	561740	ALARM JCT BOX	LO-AIR SONALERT-PRIMARY
D2	7	3A	561740	ALARM JCT BOX	LO-AIR SONALERT-SECONDARY
D4	10	3A	561740	FR JCT BOX	WARNING HAZARD-RH
D5	10	3A	561740	FR JCT BOX	WARNING HAZARD-LH
D9	17	3A	561740	ALARM JCT BOX	HOSTESS & PASSENGER CHIME
D11	23	3A	561740	RR JCT BOX	LAVATORY OCCUPIED SIGN
D12	23	3A	561740	RR JCT BOX	LAVATORY OCCUPIED SIGN
D13	23	3A	561740	FR DEST. SIGN	FR DESTINATION SIGN
D14	23	3A	561740	FR DEST. SIGN	FR DESTINATION SIGN
D15	24	3A	561740	FR JCT BOX	KNEELING SYSTEM CTR-UP
D16	24	3A	561740	FR JCT BOX	KNEELING SYSTEM CTR-DOWN
D17	10	3A	561740	FR JCT BOX	WARNING HAZARD-LH
D18	10	3A	561740	FR JCT BOX	WARNING HAZARD-RH
D19	9	3A	561740	FR JCT BOX	DAYTIME RUN LTS-PARK BRK CALL SW.
D20	9	3A	561740	FR JCT BOX	DAYTIME RUN LTS-HEAD LT SW
D21	24	3A	561740	FR JCT BOX	KNEELING SYSTEM FEED BACK
D25	13	3A	561740	FR JCT BOX	LUGGAGE DOOR AJAR T.T.LT.
D26	13	3A	561740	FR JCT BOX	LUGGAGE DOOR AJAR T.T.LT.
D27	13	3A	561740	FR JCT BOX	LUGGAGE DOOR AJAR T.T.LT.
D28	13	3A	561740	FR JCT BOX	LUGGAGE DOOR AJAR T.T.LT.
D29	13	3A	561740	FR JCT BOX	LUGGAGE DOOR AJAR T.T.LT.
D30	13	3A	561740	FR JCT BOX	LUGGAGE DOOR AJAR T.T.LT.
D31	13	3A	561740	FR JCT BOX	LUGGAGE DOOR AJAR T.T.LT.
D35	32	3A	561740	RR JCT BOX	WCL DOOR AJAR ALARM T.T.LT.
D58	24	3A	561740	FR JCT BOX	RR HIGH BUOY - KNEELING
D60	18	3A	561740	RR JCT BOX	A/C COMPR.CLUTCH SUPPRESSOR
D61	10	3A	561740	FR JCT BOX	KNEELING SIDE FR RH DIRECTIONNAL LT
D62	18	3A	561740	A/C JCT BOX	WATER PUMP FEED
D63	23	3A	561740	ALARM JCT BOX	LAVATORY SONALERT
D64	24	3A	561740	ALARM JCT BOX	KNEELING SONALERT
D65	18	3A	561740	A/C JCT BOX	WATER PUMP - PRE-HEAT FEED
D66	18	3A	561740	A/C JCT BOX	WATER VALVE - HEAT SW. FEED
D67	10	3A	561740	UNDER DASH	AUDIBLE FLASHER RLY - RH
D68	10	3A	561740	UNDER DASH	AUDIBLE FLASHER RLY - LH
D69					
D70	24	3A	561740	FR JCT BOX	FR HIGH BUOY - KNEELING
D71	24	3A	561740	FR JCT BOX	FR HIGH BUOY - KNEELING
D72	24	3A	561740	FR JCT BOX	FR HIGH BUOY - KNEELING
D73	24	3A	561740	FR JCT BOX	FR HIGH BUOY - KNEELING
D74	1	3A	561740	FR JCT BOX	DASH MASTER CUT OUT SW.
D75	4	3A	381351	BAT CPT	STARTER-SUPPRESSOR COIL RLY
D76	29	3A	381351	BAT CPT	INVERTER-SUPPRESSOR COIL RLY
D77	24	3A	561740	FR JCT BOX	PARKING BRAKE - KNEELING
D78	17	3A	561740	LH CONSOLE	PRE-HEAT WATER HEATER SW.
D79	17	3A	561740	LH CONSOLE	PRE-HEAT WATER HEATER SW.
D80	9	3A	561740	FR JCT BOX	DAYTIME RUN LTS-HEAD LTS CALL SW.
D81	24	3A	561740	FR JCT BOX	PIEZO-KNEELING
D82	24	3A	561740	FR JCT BOX	PIEZO-KNEELING
D83	8	3A	561740	RR JCT BOX	FAN CLUTCH W/RETARDER

DIODE CODE (D) Page H:1

NO.	PAGE	AMP	#PREVOST	LOCATION	FUNCTION

DIODE CODE (D) Page H:1

NO.	PAGE	AMP	#PREVOST	LOCATION	FUNCTION
D1	7	3A	561740	ALARM JCT BOX	LO-AIR SONALERT-PRIMARY
D2	7	3A	561740	ALARM JCT BOX	LO-AIR SONALERT-SECONDARY
D4	10	3A	561740	FR JCT BOX	WARNING HAZARD-RH
D5	10	3A	561740	FR JCT BOX	WARNING HAZARD-LH
D9	17	3A	561740	ALARM JCT BOX	HOSTESS & PASSENGER CHIME
D11	23	3A	561740	RR JCT BOX	LAVATORY OCCUPIED SIGN
D12	23	3A	561740	RR JCT BOX	LAVATORY OCCUPIED SIGN
D13	23	3A	561740	FR DEST. SIGN	FR DESTINATION SIGN
D14	23	3A	561740	FR DEST. SIGN	FR DESTINATION SIGN
D15	24	3A	561740	FR JCT BOX	KNEELING SYSTEM CTR-UP
D16	24	3A	561740	FR JCT BOX	KNEELING SYSTEM CTR-DOWN
D17	10	3A	561740	FR JCT BOX	WARNING HAZARD-LH
D18	10	3A	561740	FR JCT BOX	WARNING HAZARD-RH
D19	9	3A	561740	FR JCT BOX	DAYTIME RUN LTS-PARK BRK CALL SW.
D20	9	3A	561740	FR JCT BOX	DAYTIME RUN LTS-HEAD LT SW
D21	24	3A	561740	FR JCT BOX	KNEELING SYSTEM FEED BACK
D25	13	3A	561740	FR JCT BOX	LUGGAGE DOOR AJAR T.T.LT.
D26	13	3A	561740	FR JCT BOX	LUGGAGE DOOR AJAR T.T.LT.
D27	13	3A	561740	FR JCT BOX	LUGGAGE DOOR AJAR T.T.LT.
D28	13	3A	561740	FR JCT BOX	LUGGAGE DOOR AJAR T.T.LT.
D29	13	3A	561740	FR JCT BOX	LUGGAGE DOOR AJAR T.T.LT.
D30	13	3A	561740	FR JCT BOX	LUGGAGE DOOR AJAR T.T.LT.
D31	13	3A	561740	FR JCT BOX	LUGGAGE DOOR AJAR T.T.LT.
D35	32&35	3A	561740	RR JCT BOX	WCL DOOR AJAR ALARM T.T.LT.
D58	24	3A	561740	FR JCT BOX	RR HIGH BUOY - KNEELING
D60	18	3A	561740	RR JCT BOX	A/C COMPR.CLUTCH SUPPRESSOR
D61	10	3A	561740	FR JCT BOX	KNEELING SIDE FR RH DIRECTIONNAL LT
D62	18	3A	561740	A/C JCT BOX	WATER PUMP FEED
D63	23	3A	561740	ALARM JCT BOX	LAVATORY SONALERT
D64	23	3A	561740	ALARM JCT BOX	WCL DOOR ALARM
D65	18	3A	561740	A/C JCT BOX	WATER PUMP - PRE-HEAT FEED
D66	18	3A	561740	A/C JCT BOX	WATER VALVE - HEAT SW. FEED
D67	10	3A	561740	UNDER DASH	AUDIBLE FLASHER RLY - RH
D68	10	3A	561740	UNDER DASH	AUDIBLE FLASHER RLY - LH
D70	24	3A	561740	FR JCT BOX	FR HIGH BUOY - KNEELING
D71	24	3A	561740	FR JCT BOX	FR HIGH BUOY - KNEELING
D72	24	3A	561740	FR JCT BOX	FR HIGH BUOY - KNEELING
D73	24	3A	561740	FR JCT BOX	FR HIGH BUOY - KNEELING
D74	1	3A	561740	FR JCT BOX	DASH MASTER CUT OUT SW.
D75	4	3A	381351	BAT CPT	STARTER-SUPPRESSOR COIL RLY
D77	24	3A	561740	FR JCT BOX	PARKING BRAKE - KNEELING
D78	17	3A	561740	LH CONSOLE	PRE-HEAT WATER HEATER SW.
D79	17	3A	561740	LH CONSOLE	PRE-HEAT WATER HEATER SW.
D80	9	3A	561740	FR JCT BOX	DAYTIME RUN LTS-HEAD LTS CALL SW.
D81	24	3A	561740	FR JCT BOX	PIEZO-KNEELING
D82	24	3A	561740	FR JCT BOX	PIEZO-KNEELING
D83	8	3A	561740	RR JCT BOX	FAN CLUTCH W/RETARDER
D84	18	3A	561740	A/C JCT BOX	WATER VALVE
D85	18	3A	561740	A/C JCT BOX	WATER PUMP
D86	22	3A	561740	UNDER DASH RH	ENTRANCE DOOR SEDAN
D87	22	3A	561740	UNDER DASH RH	ENTRANCE DOOR SEDAN
D88	22	3A	561740	UNDER DASH RH	ENTRANCE DOOR SEDAN
D89	22	3A	561740	UNDER DASH RH	ENTRANCE DOOR SEDAN
D90	22	3A	561740	UNDER DASH RH	ENTRANCE DOOR SEDAN
D91	22	3A	561740	UNDER DASH RH	ENTRANCE DOOR SEDAN

DIODE CODE (D) Page H:1

NO.	PAGE	AMP	#PREVOST	LOCATION	FUNCTION

DIODE CODE (D) Page H:1

NO.	PAGE	AMP	#PREVOST	LOCATION	FUNCTION
D1	7	3A	561740	ALARM JCT BOX	LO-AIR SONALERT-PRIMARY
D2	7	3A	561740	ALARM JCT BOX	LO-AIR SONALERT-SECONDARY
D4	10	3A	561740	FR JCT BOX	WARNING HAZARD-RH
D5	10	3A	561740	FR JCT BOX	WARNING HAZARD-LH
D6	5	3A	561740	FR JCT BOX	WCL NEUTRAL SIGN INTERFACE TO PARK BRK TTLT
D9	17	3A	561740	ALARM JCT BOX	HOSTESS & PASSENGER CHIME
D11	23	3A	561740	RR JCT BOX	LAVATORY OCCUPIED SIGN
D12	23	3A	561740	RR JCT BOX	LAVATORY OCCUPIED SIGN
D13	23	3A	561740	FR DEST. SIGN	FR DESTINATION SIGN
D14	23	3A	561740	FR DEST. SIGN	FR DESTINATION SIGN
D15	24	3A	561740	FR JCT BOX	KNEELING SYSTEM CTR-UP
D16	24	3A	561740	FR JCT BOX	KNEELING SYSTEM CTR-DOWN
D17	10	3A	561740	FR JCT BOX	WARNING HAZARD-LH
D18	10	3A	561740	FR JCT BOX	WARNING HAZARD-RH
D19	9	3A	561740	FR JCT BOX	DAYTIME RUN LTS-PARK BRK CALL SW.
D20	9	3A	561740	FR JCT BOX	DAYTIME RUN LTS-HEAD LT SW
D21	24	3A	561740	FR JCT BOX	KNEELING SYSTEM FEED BACK
D25	13	3A	561740	FR JCT BOX	LUGGAGE DOOR AJAR T.T.LT.
D26	13	3A	561740	FR JCT BOX	LUGGAGE DOOR AJAR T.T.LT.
D27	13	3A	561740	FR JCT BOX	LUGGAGE DOOR AJAR T.T.LT.
D28	13	3A	561740	FR JCT BOX	LUGGAGE DOOR AJAR T.T.LT.
D29	13	3A	561740	FR JCT BOX	LUGGAGE DOOR AJAR T.T.LT.
D30	13	3A	561740	FR JCT BOX	LUGGAGE DOOR AJAR T.T.LT.
D31	13	3A	561740	FR JCT BOX	LUGGAGE DOOR AJAR T.T.LT.
D32	15	3A	561740	FRONT ROOF CABL.	DRIVER'S LTS FEED BY STEP LTS
D33	15	3A	561740	FRONT ROOF CABL.	DRIVER'S LTS FEED BY STEP LTS
D35	32&35	3A	561740	RR JCT BOX	WCL DOOR AJAR ALARM T.T.LT.
D58	24	3A	561740	FR JCT BOX	RR HIGH BUOY - KNEELING
D60	18	3A	561740	RR JCT BOX	A/C COMPR.CLUTCH SUPPRESSOR
D61	10	3A	561740	FR JCT BOX	KNEELING SIDE FR RH DIRECTIONNAL LT
D62	18	3A	561740	A/C JCT BOX	WATER PUMP FEED
D63	23	3A	561740	ALARM JCT BOX	LAVATORY SONALERT
D64	23	3A	561740	ALARM JCT BOX	WCL DOOR ALARM
D65	18	3A	561740	A/C JCT BOX	WATER PUMP - PRE-HEAT FEED
D66	18	3A	561740	A/C JCT BOX	WATER VALVE - HEAT SW. FEED
D67	10	3A	561740	UNDER DASH	AUDIBLE FLASHER RLY - RH
D68	10	3A	561740	UNDER DASH	AUDIBLE FLASHER RLY - LH
D70	24	3A	561740	FR JCT BOX	FR HIGH BUOY - KNEELING
D71	24	3A	561740	FR JCT BOX	FR HIGH BUOY - KNEELING
D72	24	3A	561740	FR JCT BOX	FR HIGH BUOY - KNEELING
D73	24	3A	561740	FR JCT BOX	FR HIGH BUOY - KNEELING
D74	1	3A	561740	FR JCT BOX	DASH MASTER CUT OUT SW.
D75	4	3A	381351	BAT CPT	STARTER-SUPPRESSOR COIL RLY
D77	24	3A	561740	FR JCT BOX	PARKING BRAKE - KNEELING
D78	17	3A	561740	LH CONSOLE	PRE-HEAT WATER HEATER SW.
D79	17	3A	561740	LH CONSOLE	PRE-HEAT WATER HEATER SW.
D80	9	3A	561740	FR JCT BOX	DAYTIME RUN LTS-HEAD LTS CALL SW.
D81	24	3A	561740	FR JCT BOX	PIEZO-KNEELING
D82	24	3A	561740	FR JCT BOX	PIEZO-KNEELING
D83	8	3A	561740	RR JCT BOX	FAN CLUTCH W/RETARDER
D84	18	3A	561740	A/C JCT BOX	WATER VALVE
D85	18	3A	561740	A/C JCT BOX	WATER PUMP
D86	22	3A	561740	UNDER DASH RH	ENTRANCE DOOR SEDAN
D87	22	3A	561740	UNDER DASH RH	ENTRANCE DOOR SEDAN
D88	22	3A	561740	UNDER DASH RH	ENTRANCE DOOR SEDAN
D89	22	3A	561740	UNDER DASH RH	ENTRANCE DOOR SEDAN
D90	22	3A	561740	UNDER DASH RH	ENTRANCE DOOR SEDAN
D91	22	3A	561740	UNDER DASH RH	ENTRANCE DOOR SEDAN

DIODE CODE (D) Page H:1

NO.	PAGE	AMP	#PREVOST	LOCATION	FUNCTION

RELAYS CODE (R) Page I : 1

NO.	PAGE	COIL V	#PREVOST	LOCATION	FUNCTION
R1	1	24V	561991	FR JCT BOX	ENGINE RUN (24) FR
R2	2	24V	561991	BATT. CPT.	ENGINE RUN (12) FR & RR
R3	4	24V	561707	BATT. CPT.	FIELD RELAY
R4	4	24V	561005	BATT. CPT.	STARTING MOTOR
R5	5	24V	561707	FR JCT BOX	CRUISE CTR. STOP SIGN.
R6	11	24V	561707	RR JCT BOX	STOP LTS-PARKING BRAKE
R7	5	24V	561707	FR JCT BOX	FAST IDLE
R8	6	24V	561707	RR JCT BOX	12V IGNITION WT
R9	11	24V	561707	RR JCT BOX	BACK-UP LTS
R11	5	24V	561707	RR JCT BOX	12V IGNITION DDEC3
R12	7	12V	562092	FR JCT BOX	ELECTRICAL HORNS
R13	11	24V	561707	FR JCT BOX	FOG LTS
R14	9	24V	561707	FR JCT BOX	BLINKER
R15	9	24V	561707	FR JCT BOX	FR MARKER LTS
R16	9	24V	561707	FR JCT BOX	IDENT. & CLEARANCE LTS
R17	9	24V	561707	RR JCT BOX	TAIL.LICENCE.MARKER-RR LTS
R18	9	24V	561707	FR JCT BOX	D R L-PARK BRK CUT-IN
R19	9	24V	561707	FR JCT BOX	HEADLAMPS (HI)
R20	9	24V	561707	FR JCT BOX	HEADLAMPS (LO)
R21	10	24V	561707	FR JCT BOX	L.H. DIRECTIONNAL LT
R23	10	24V	561707	FR JCT BOX	R.H. DIRECTIONNAL LT
R24	10	24V	561707	FR JCT BOX	R.H. CORNERING LT
R25	10	24V	561707	FR JCT BOX	L.H. CORNERING LT
R26	11	24V	561707	RR JCT BOX	STOP LTS
R27	14	24V	561707	RR JCT BOX	AISLE & EMERG.EXIT - LTS
R28	14	24V	561707	FR JCT BOX	DASH LTS RHEOSTAT
R29	15	24V	561707	RR JCT BOX	READING LTS R.H.
R30	15	24V	561707	RR JCT BOX	READING LTS L.H.
R31	15	24V	561707	RR JCT BOX	GENERAL LTS
R32	16	24V	561707	RR JCT BOX	24V FLUORESCENT
R33	18	12V	561538	FR JCT BOX	BLOWER CUT-IN RLY
R34	18	24V	561707	A/C JCT BOX	A/C LOGIC PANEL
R35	18	24V	561707	A/C JCT BOX	WATER PUMP
R36	18	24V	561707	A/C JCT BOX	A/C COMPRESSOR CLUTCH
R37	10	24V	561707	FR JCT BOX	KNEELING LT
R39	19	24V	560407	A/C JCT BOX	CONDENSER FAN MOTOR
R40	19	24V	561014	A/C JCT BOX	CONDENSER SPEED CTR HI
R41	19	24V	560407	A/C JCT BOX	CONDENSER SPEED CTR HI
R42	23	24V	561707	RR JCT BOX	LAVATORY FLUORESCENT
R43	24	24V	561707	FR JCT BOX	KNEELING SYSTEM
R44	24	24V	561707	FR JCT BOX	KNEELING SYSTEM
R45	29	24V	560407	BATT. CPT.	V.C.R. INVERTER CUT-IN
R47	30	24V	561707	INVERTER COMPT	GALLEY-LIQUID CONTAINERS
R48	30	24V	561707	INVERTER COMPT	COFFEE MAKER
R49	27	24V	561707	FR JCT BOX	ABS - SERVICE BRK RLY
R50	27	24V	561707	FR JCT BOX	ABS - VR2 RLY
R51	27	24V	561707	FR JCT BOX	ABS - WARNING RLY
R52	27	24V	561707	FR JCT BOX	ABS - VR1 RLY
R53	1	24V	561991	RR JCT BOX	ENGINE RUN (24) RR
R54	1	24V	561991	BATT. CPT.	12V CUT OUT RLY RR
R55	1	24V	561991	BATT. CPT.	12V CUT OUT RLY FR
R57	9	24V	561707	FR JCT BOX	DAY'S BLINKER
R58	--	12V	562092	RR JCT BOX	HYD. TRANSM. MODULATOR CTR
R59	11	12V	562092	RR JCT BOX	DOCKING LTS
R60	9	12V	561538	FR JCT BOX	DAYTIME RUN LTS
R61	11	24V	561707	RR JCT BOX	STOP LTS-JACOB & RET. SIGNAL
R68	26	24V	561557	FR JCT BOX	SOUND SYSTEM CUT IN

RELAYS CODE (R) Page I : 1

NO.	PAGE	COIL V	#PREVOST	LOCATION	FUNCTION
R77	18	24V	561707	A/C JCT BOX	WATER VALVE-A/C
R78	1	12V	561538	FR JCT BOX	MASTER SWITCH
R79	30	24V	561707	GALLEY CPT.	GALLEY-REFRIGERATOR
R82	25	12V	561707	FR JCT BOX	RETARDER WT
R83	9	12V	561538	FR JCT BOX	DAYTIME RUN LTS
R84	8	24V	561707	RR JCT BOX	FAN CLUTCH-FIRST SPEED
R85	8	24V	561707	RR JCT BOX	FAN CLUTCH-SECOND SPEED
R87	25	24V	561707	RR JCT BOX	ENGINE BRAKE REQUEST WT
R88	11	24V	561707	RR JCT BOX	DOCKING LTS WITH FLASHER (SPECIAL)
R89	28	24V	561707	FR JCT BOX	HEATING WINDSHIELD
R90	28	24V	561707	FR JCT BOX	HEATING WINDSHIELD
R91	28	24V	561707	FR JCT BOX	HEATING WINDSHIELD
R92	28	24V	561707	FR JCT BOX	HEATING WINDSHIELD
R93	33	24V	561707	RR JCT BOX	PRE-HEAT WATER HEATER (WEBASTO)
R94	32	24V	561707	RR JCT BOX	WCL - SYSTEM
R95	32	24V	561707	RR JCT BOX	WCL - MAGNETIC SW. SIGN.
R96	32	24V	561707	RR JCT BOX	WCL - DOOR AJAR ALARM
R97	32	24V	561707	RR JCT BOX	WCL - DOOR AJAR PARK. BRAKE
R98	32	24V	561538	RR JCT BOX	WCL - RUN & PARK. BRAKE SIGN.

LAZER FORMAT "A" ECHELLE 3.2:1

RELAYS CODE (R) Page I : 1

NO.	PAGE	COIL V	#PREVOST	LOCATION	FUNCTION
R1	1	24V	561991	FR JCT BOX	ENGINE RUN (24) FR
R2	2	24V	561991	BATT. CPT.	ENGINE RUN (12) FR & RR
R3	4	24V	561707	BATT. CPT.	FIELD RELAY
R4	4	24V	561005	BATT. CPT.	STARTING MOTOR
R5	5	24V	561707	FR JCT BOX	CRUISE CTR. STOP SIGN.
R6	11	24V	561707	RR JCT BOX	STOP LTS-PARKING BRAKE
R7	5	24V	561707	FR JCT BOX	FAST IDLE
R8	6	24V	561707	RR JCT BOX	12V IGNITION WT
R9	11	24V	561707	RR JCT BOX	BACK-UP LTS
R11	5	24V	561707	RR JCT BOX	12V IGNITION DDEC3
R12	7	12V	562092	FR JCT BOX	ELECTRICAL HORNS
R13	11	24V	561707	FR JCT BOX	FOG LTS
R14	9	24V	561707	FR JCT BOX	BLINKER
R15	9	24V	561707	FR JCT BOX	FR MARKER LTS
R16	9	24V	561707	FR JCT BOX	IDENT. & CLEARANCE LTS
R17	9	24V	561707	RR JCT BOX	TAIL,LICENCE,MARKER-RR LTS
R18	9	24V	561707	FR JCT BOX	D R L-PARK BRK CUT-IN
R19	9	24V	561707	FR JCT BOX	HEADLAMPS (HI)
R20	9	24V	561707	FR JCT BOX	HEADLAMPS (LO)
R21	10	24V	561707	FR JCT BOX	L.H. DIRECTIONNAL LT
R23	10	24V	561707	FR JCT BOX	R.H. DIRECTIONNAL LT
R24	10	24V	561707	FR JCT BOX	R.H. CORNERING LT
R25	10	24V	561707	FR JCT BOX	L.H. CORNERING LT
R26	11	24V	561707	RR JCT BOX	STOP LTS
R27	14	24V	561707	RR JCT BOX	AISLE & EMERG.EXIT - LTS
R28	14	24V	561707	FR JCT BOX	DASH LTS RHEOSTAT
R29	15	24V	561707	RR JCT BOX	READING LTS R.H.
R30	15	24V	561707	RR JCT BOX	READING LTS L.H.
R31	15	24V	561707	RR JCT BOX	GENERAL LTS
R32	16	24V	561707	RR JCT BOX	24V FLUORESCENT
R33	18	12V	561538	FR JCT BOX	BLOWER CUT-IN RLY
R34	18	24V	561707	A/C JCT BOX	A/C LOGIC PANEL
R35	18	24V	561707	A/C JCT BOX	WATER PUMP
R36	18	24V	561707	A/C JCT BOX	A/C COMPRESSOR CLUTCH
R37	10	24V	561707	FR JCT BOX	KNEELING LT
R39	19	24V	560407	A/C JCT BOX	CONDENSER FAN MOTOR
R40	19	24V	561014	A/C JCT BOX	CONDENSER SPEED CTR HI
R41	19	24V	560407	A/C JCT BOX	CONDENSER SPEED CTR HI
R42	23	24V	561707	RR JCT BOX	LAVATORY FLUORESCENT
R43	24	24V	561707	FR JCT BOX	KNEELING SYSTEM
R44	24	24V	561707	FR JCT BOX	KNEELING SYSTEM
R45	29	24V	560407	BATT. CPT.	V.C.R. INVERTER CUT-IN
R47	30	24V	561707	INVERTER COMPT	GALLEY-LIQUID CONTAINERS
R48	30	24V	561707	INVERTER COMPT	COFFEE MAKER
R49	27	24V	561707	FR JCT BOX	ABS - SERVICE BRK RLY
R50	27	24V	561707	FR JCT BOX	ABS - VR2 RLY
R51	27	24V	561707	FR JCT BOX	ABS - WARNING RLY
R52	27	24V	561707	FR JCT BOX	ABS - VR1 RLY
R53	1	24V	561991	RR JCT BOX	ENGINE RUN (24) RR
R54	1	24V	561991	BATT. CPT.	12V CUT OUT RLY RR
R55	1	24V	561991	BATT. CPT.	12V CUT OUT RLY FR
R57	9	24V	561707	FR JCT BOX	DAY'S BLINKER
R58	--	12V	562092	RR JCT BOX	HYD. TRANSM. MODULATOR CTR
R59	11	12V	562092	RR JCT BOX	DOCKING LTS
R60	9	12V	561538	FR JCT BOX	DAYTIME RUN LTS
R61	11	24V	561707	RR JCT BOX	STOP LTS-JACOB & RET. SIGNAL
R68	26	24V	561557	FR JCT BOX	SOUND SYSTEM CUT IN

RELAYS CODE (R) Page I : 1

NO.	PAGE	COIL V	#PREVOST	LOCATION	FUNCTION
R77	18	24V	561707	A/C JCT BOX	WATER VALVE-A/C
R78	1	12V	561538	FR JCT BOX	MASTER SWITCH
R79	30	24V	561707	GALLEY CPT.	GALLEY-REFRIGERATOR
R82	25	24V	561707	FR JCT BOX	RETARDER WT
R83	9	12V	561538	FR JCT BOX	DAYTIME RUN LTS
R84	8	24V	561707	RR JCT BOX	FAN CLUTCH-FIRST SPEED
R85	8	24V	561707	RR JCT BOX	FAN CLUTCH-SECOND SPEED
R87	25	24V	561707	RR JCT BOX	ENGINE BRAKE REQUEST WT
R88	11	24V	561707	RR JCT BOX	DOCKING LTS WITH FLASHER (SPECIAL)
R89	28	24V	561707	FR JCT BOX	HEATING WINDSHIELD
R90	28	24V	561707	FR JCT BOX	HEATING WINDSHIELD
R91	28	24V	561707	FR JCT BOX	HEATING WINDSHIELD
R92	28	24V	561707	FR JCT BOX	HEATING WINDSHIELD
R93	33	24V	561707	RR JCT BOX	PRE-HEAT WATER HEATER (WEBASTO)
R94	32	24V	561707	RR JCT BOX	WCL - SYSTEM
R95	32	24V	561707	RR JCT BOX	WCL - MAGNETIC SW. SIGN.
R96	32	24V	561707	RR JCT BOX	WCL - DOOR AJAR ALARM
R97	32	24V	561707	RR JCT BOX	WCL - DOOR AJAR PARK. BRAKE
R98	32	24V	561538	RR JCT BOX	WCL - RUN & PARK. BRAKE SIGN.
R99	8	24V	561707	RR JCT BOX	RADIATOR FAN CLUTCH
RF1	8	24V	561707	RR JCT BOX	FAN CLUTCH W/RET. SPEED 1
RF2	8	24V	561707	RR JCT BOX	FAN CLUTCH W/RET. SPEED 2
RF3	8	24V	560772	RR JCT BOX	TIME DELAY
RLA	22	24V	561707	UNDER DASH RH.	ENTRANCE DOOR SEDAN (LATCH)
RLO	22	24V	561707	UNDER DASH RH.	ENTRANCE DOOR SEDAN (PRESS. SW.)
RLT	22	24V	561707	UNDER DASH RH.	ENTRANCE DOOR SEDAN (LIGHT)
RLV	22	24V	561707	UNDER DASH RH.	ENTRANCE DOOR SEDAN (VALVE)

RELAYS CODE (R)

Page I : 1

NO.	PAGE	COIL V	#PREVOST	LOCATION	FUNCTION
R1	1	24V	561991	FR JCT BOX	ENGINE RUN (24) FR
R2	2	24V	561991	BATT. CPT.	ENGINE RUN (12) FR & RR
R3	4	24V	561707	BATT. CPT.	FIELD RELAY
R4	4	24V	561005	BATT. CPT.	STARTING MOTOR
R5	5	24V	561707	FR JCT BOX	CRUISE CTR. STOP SIGN.
R6	11	24V	561707	RR JCT BOX	STOP LTS-PARKING BRAKE
R7	5	24V	561707	FR JCT BOX	FAST IDLE
R8	6	24V	561707	RR JCT BOX	12V IGNITION WT
R9	11	24V	561707	RR JCT BOX	BACK-UP LTS
R11	5	24V	561707	RR JCT BOX	12V IGNITION DDEC3
R12	7	12V	562092	FR JCT BOX	ELECTRICAL HORNS
R13	11	24V	561707	FR JCT BOX	FOG LTS
R14	9	24V	561707	FR JCT BOX	BLINKER
R15	9	24V	561707	FR JCT BOX	FR MARKER LTS
R16	9	24V	561707	FR JCT BOX	IDENT. & CLEARANCE LTS
R17	9	24V	561707	RR JCT BOX	TAIL,LICENCE,MARKER-RR LTS
R18	9	24V	561707	FR JCT BOX	D R L-PARK BRK CUT-IN
R19	9	24V	561707	FR JCT BOX	HEADLAMPS (HI)
R20	9	24V	561707	FR JCT BOX	HEADLAMPS (LO)
R21	10	24V	561707	FR JCT BOX	L.H. DIRECTIONNAL LT
R23	10	24V	561707	FR JCT BOX	R.H. DIRECTIONNAL LT
R24	10	24V	561707	FR JCT BOX	R.H. CORNERING LT
R25	10	24V	561707	FR JCT BOX	L.H. CORNERING LT
R26	11	24V	561707	RR JCT BOX	STOP LTS
R27	14	24V	561707	RR JCT BOX	AISLE & EMERG.EXIT - LTS
R28	14	24V	561707	FR JCT BOX	DASH LTS RHEOSTAT
R29	15	24V	561707	RR JCT BOX	READING LTS R.H.
R30	15	24V	561707	RR JCT BOX	READING LTS L.H.
R31	15	24V	561707	RR JCT BOX	GENERAL LTS
R32	16	24V	561707	RR JCT BOX	24V FLUORESCENT
R33	18	12V	561538	FR JCT BOX	BLOWER CUT-IN RLY
R34	18	24V	561707	A/C JCT BOX	A/C LOGIC PANEL
R35	18	24V	561707	A/C JCT BOX	WATER PUMP
R36	18	24V	561707	A/C JCT BOX	A/C COMPRESSOR CLUTCH
R37	10	24V	561707	FR JCT BOX	KNEELING LT
R39	19	24V	560407	A/C JCT BOX	CONDENSER FAN MOTOR
R40	19	24V	561014	A/C JCT BOX	CONDENSER SPEED CTR HI
R41	19	24V	560407	A/C JCT BOX	CONDENSER SPEED CTR HI
R42	23	24V	561707	RR JCT BOX	LAVATORY FLUORESCENT
R43	24	24V	561707	FR JCT BOX	KNEELING SYSTEM
R44	24	24V	561707	FR JCT BOX	KNEELING SYSTEM
R47	30	24V	561707	INVERTER COMPT	GALLEY-LIQUID CONTAINERS
R48	30	24V	561707	INVERTER COMPT	COFFEE MAKER
R49	27	24V	561707	FR JCT BOX	ABS - SERVICE BRK RLY
R50	27	24V	561707	FR JCT BOX	ABS - VR2 RLY
R51	27	24V	561707	FR JCT BOX	ABS - WARNING RLY
R52	27	24V	561707	FR JCT BOX	ABS - VR1 RLY
R53	1	24V	561991	RR JCT BOX	ENGINE RUN (24) RR
R54	1	24V	561991	BATT. CPT.	12V CUT OUT RLY RR
R55	1	24V	561991	BATT. CPT.	12V CUT OUT RLY FR
R57	9	24V	561707	FR JCT BOX	DAY'S BLINKER
R58	--	12V	562092	RR JCT BOX	HYD. TRANSM. MODULATOR CTR
R59	11	12V	562092	RR JCT BOX	DOCKING LTS
R60	9	12V	561538	FR JCT BOX	DAYTIME RUN LTS
R61	11	24V	561707	RR JCT BOX	STOP LTS-JACOB & RET. SIGNAL
R66	29	24V	561707	SS JCT PANEL	SOUND SYSTEM VIDEO
R67	26	24V	561707	SS JCT PANEL	SOUND SYSTEM RADIO
R68	26	24V	561991	SS JCT PANEL	SOUND SYSTEM AMPLIFIER
R77	18	24V	561707	A/C JCT BOX	WATER VALVE-A/C
R78	1	12V	561538	FR JCT BOX	MASTER SWITCH

RELAYS CODE (R)

Page I : 1

NO.	PAGE	COIL V	#PREVOST	LOCATION	FUNCTION
R79	30	24V	561707	GALLEY CPT.	GALLEY-REFRIGERATOR
R82	25	24V	561707	FR JCT BOX	RETARDER WT
R83	9	12V	561538	FR JCT BOX	DAYTIME RUN LTS
R84	8	24V	561707	RR JCT BOX	FAN CLUTCH-FIRST SPEED
R85	8	24V	561707	RR JCT BOX	FAN CLUTCH-SECOND SPEED
R87	25	24V	561707	RR JCT BOX	ENGINE BRAKE REQUEST WT
R88	11	24V	561707	RR JCT BOX	DOCKING LTS WITH FLASHER (SPECIAL)
R89	28	24V	561707	FR JCT BOX	HEATING WINDSHIELD
R90	28	24V	561707	FR JCT BOX	HEATING WINDSHIELD
R91	28	24V	561707	FR JCT BOX	HEATING WINDSHIELD
R92	28	24V	561707	FR JCT BOX	HEATING WINDSHIELD
R93	33	24V	561707	RR JCT BOX	PRE-HEAT WATER HEATER (WEBASTO)
R94	32&35	24V	561707	RR JCT BOX	WCL - SYSTEM
R95	32&35	24V	561707	RR JCT BOX	WCL - MAGNETIC SW. SIGN.
R96	32&35	24V	561707	RR JCT BOX	WCL - DOOR AJAR ALARM
R97	32&35	24V	561707	RR JCT BOX	WCL - DOOR AJAR PARK. BRAKE
R98	32&35	12V	561538	RR JCT BOX	WCL - RUN & PARK. BRAKE SIGN.
R99	8	24V	561707	RR JCT BOX	RADIATOR FAN CLUTCH
RF1	8	24V	561707	RR JCT BOX	FAN CLUTCH W/RET. SPEED 1
RF2	8	24V	561707	RR JCT BOX	FAN CLUTCH W/RET. SPEED 2
RF3	8	24V	560772	RR JCT BOX	TIME DELAY
RLA	22	24V	561707	UNDER DASH RH.	ENTRANCE DOOR SEDAN (LATCH)
RLO	22	24V	561707	UNDER DASH RH.	ENTRANCE DOOR SEDAN (PRESS. SW.)
RLT	22	24V	561707	UNDER DASH RH.	ENTRANCE DOOR SEDAN (LIGHT)
RLV	22	24V	561707	UNDER DASH RH.	ENTRANCE DOOR SEDAN (VALVE)

RELAYS CODE (R)

Page I : 1

NO.	PAGE	COIL V	#PREVOST	LOCATION	FUNCTION
R1	1	24V	561991	FR JCT BOX	ENGINE RUN (24) FR
R2	2	24V	561991	BATT. CPT.	ENGINE RUN (12) FR & RR
R3	4	24V	561707	BATT. CPT.	FIELD RELAY
R4	4	24V	561005	BATT. CPT.	STARTING MOTOR
R5	5	24V	561707	FR JCT BOX	CRUISE CTR. STOP SIGN.
R6	11	24V	561707	RR JCT BOX	STOP LTS-PARKING BRAKE
R7	5	24V	561707	FR JCT BOX	FAST IDLE
R8	6	24V	561707	RR JCT BOX	12V IGNITION WT
R9	11	24V	561707	RR JCT BOX	BACK-UP LTS
R11	5	24V	561707	RR JCT BOX	12V IGNITION DDEC3
R12	7	12V	562092	FR JCT BOX	ELECTRICAL HORNS
R13	11	24V	561707	FR JCT BOX	FOG LTS
R14	9	24V	561707	FR JCT BOX	BLINKER
R15	9	24V	561707	FR JCT BOX	FR MARKER LTS
R16	9	24V	561707	FR JCT BOX	IDENT. & CLEARANCE LTS
R17	9	24V	561707	RR JCT BOX	TAIL,LICENCE,MARKER-RR LTS
R18	9	24V	561707	FR JCT BOX	D R L-PARK BRK CUT-IN
R19	9	24V	561707	FR JCT BOX	HEADLAMPS (HI)
R20	9	24V	561707	FR JCT BOX	HEADLAMPS (LO)
R21	10	24V	561707	FR JCT BOX	L.H. DIRECTIONNAL LT
R23	10	24V	561707	FR JCT BOX	R.H. DIRECTIONNAL LT
R24	10	24V	561707	FR JCT BOX	R.H. CORNERING LT
R25	10	24V	561707	FR JCT BOX	L.H. CORNERING LT
R26	11	24V	561707	RR JCT BOX	STOP LTS
R27	14	24V	561707	RR JCT BOX	AISLE & EMERG.EXIT - LTS
R28	14	24V	561707	FR JCT BOX	DASH LTS RHEOSTAT
R29	15	24V	561707	RR JCT BOX	READING LTS R.H.
R30	15	24V	561707	RR JCT BOX	READING LTS L.H.
R31	15	24V	561707	RR JCT BOX	GENERAL LTS
R32	16	24V	561707	RR JCT BOX	24V FLUORESCENT
R33	18	12V	561538	FR JCT BOX	BLOWER CUT-IN RLY
R34	18	24V	561707	A/C JCT BOX	A/C LOGIC PANEL
R35	18	24V	561707	A/C JCT BOX	WATER PUMP
R36	18	24V	561707	A/C JCT BOX	A/C COMPRESSOR CLUTCH
R37	10	24V	561707	FR JCT BOX	KNEELING LT
R39	19	24V	560407	A/C JCT BOX	CONDENSER FAN MOTOR
R40	19	24V	561014	A/C JCT BOX	CONDENSER SPEED CTR HI
R41	19	24V	560407	A/C JCT BOX	CONDENSER SPEED CTR HI
R42	23	24V	561707	RR JCT BOX	LAVATORY FLUORESCENT *** PRIOR R021
R43	24	24V	561707	FR JCT BOX	KNEELING SYSTEM
R44	24	24V	561707	FR JCT BOX	KNEELING SYSTEM
R47	30	24V	561707	INVERTER COMPT	GALLEY-LIQUID CONTAINERS
R48	30	24V	561707	INVERTER COMPT	COFFEE MAKER
R49	27	24V	561707	FR JCT BOX	ABS - SERVICE BRK RLY
R50	27	24V	561707	FR JCT BOX	ABS - VR2 RLY
R51	27	24V	561707	FR JCT BOX	ABS - WARNING RLY
R52	27	24V	561707	FR JCT BOX	ABS - VR1 RLY
R53	1	24V	561991	RR JCT BOX	ENGINE RUN (24) RR
R54	1	24V	561991	BATT. CPT.	12V CUT OUT RLY RR
R55	1	24V	561991	BATT. CPT.	12V CUT OUT RLY FR
R57	9	24V	561707	FR JCT BOX	DAY'S BLINKER
R58	--	12V	562092	RR JCT BOX	HYD. TRANSM. MODULATOR CTR
R59	11	12V	562092	RR JCT BOX	DOCKING LTS
R60	9	12V	561538	FR JCT BOX	DAYTIME RUN LTS
R61	11	24V	561707	RR JCT BOX	STOP LTS-JACOB & RET. SIGNAL
R66	29	24V	561707	SS JCT PANEL	SOUND SYSTEM VIDEO
R67	26	24V	561707	SS JCT PANEL	SOUND SYSTEM RADIO
R68	26	24V	561991	SS JCT PANEL	SOUND SYSTEM AMPLIFIER
R77	18	24V	561707	A/C JCT BOX	WATER VALVE-A/C
R78	1	12V	561538	FR JCT BOX	MASTER SWITCH

RELAYS CODE (R)

Page I : 1

NO.	PAGE	COIL V	#PREVOST	LOCATION	FUNCTION
R79	30	24V	561707	GALLEY CPT.	GALLEY-REFRIGERATOR
R80	13	24V	561707	RR JCT BOX	ENGINE COMPARTMENT LTS
R82	25	24V	561707	FR JCT BOX	RETARDER WT
R83	9	12V	561538	FR JCT BOX	DAYTIME RUN LTS
R84	8	24V	561707	RR JCT BOX	FAN CLUTCH-FIRST SPEED
R85	8	24V	561707	RR JCT BOX	FAN CLUTCH-SECOND SPEED
R87	25	24V	561707	RR JCT BOX	ENGINE BRAKE REQUEST WT
R88	11	24V	561707	RR JCT BOX	DOCKING LTS WITH FLASHER (SPECIAL)
R89	28	24V	561707	FR JCT BOX	HEATING WINDSHIELD
R90	28	24V	561707	FR JCT BOX	HEATING WINDSHIELD
R91	28	24V	561707	FR JCT BOX	HEATING WINDSHIELD
R92	28	24V	561707	FR JCT BOX	HEATING WINDSHIELD
R93	33	24V	561707	RR JCT BOX	PRE-HEAT WATER HEATER (WEBASTO)
R94	32&35	24V	561707	RR JCT BOX	WCL - SYSTEM
R95	32&35	24V	561707	RR JCT BOX	WCL - MAGNETIC SW. SIGN.
R96	32&35	24V	561707	RR JCT BOX	WCL - DOOR AJAR ALARM
R97	32&35	24V	561707	RR JCT BOX	WCL - DOOR AJAR PARK. BRAKE
R98	32&35	12V	561538	RR JCT BOX	WCL - RUN & PARK. BRAKE SIGN.
R99	8	24V	561707	RR JCT BOX	RADIATOR FAN CLUTCH
RF1	8	24V	561707	RR JCT BOX	FAN CLUTCH W/RET. SPEED 1
RF2	8	24V	561707	RR JCT BOX	FAN CLUTCH W/RET. SPEED 2
RF3	8	24V	560772	RR JCT BOX	TIME DELAY
RLA	22	24V	561707	UNDER DASH RH.	ENTRANCE DOOR SEDAN (LATCH)
RLO	22	24V	561707	UNDER DASH RH.	ENTRANCE DOOR SEDAN (PRESS. SW.)
RLT	22	24V	561707	UNDER DASH RH.	ENTRANCE DOOR SEDAN (LIGHT)
RLV	22	24V	561707	UNDER DASH RH.	ENTRANCE DOOR SEDAN (VALVE)
VIMN	6	12V	562092	RR JCT BOX	VIM WORLD TR.-NEUTRAL SIGNAL
VIMR	6	12V	562092	RR JCT BOX	VIM WORLD TR.-B/U SIGNAL
VIM1	6	12V	562092	RR JCT BOX	VIM WORLD TR.-OUTPUT 1
VIM2	6	12V	562092	RR JCT BOX	VIM WORLD TR.-OUTPUT 2 ENG. BRK DISABLE
VIM3	6	12V	562092	RR JCT BOX	VIM WORLD TR.-OUTPUT 3 SPD SW. 5MPH NO NC
VIM4	6	12V	562092	RR JCT BOX	VIM WORLD TR.-OUTPUT 4 RETARDER ON SIGNAL

RESISTOR CODE (RS) Page J : 1

NO.	PAGE	OHM(S)	#PREVOST	LOCATION	FUNCTION
RS1	5	11 K	561898	FR JCT BOX	FAST IDLE DDEC CONTROL
RS2	5	3.6 K	561897	FR JCT BOX	FAST IDLE DDEC CONTROL
RS3	11	1 (2)	561537	FR SERV. COMPT.	FOG LT - RH
RS4	11	1 (2)	561537	FR SERV. COMPT.	FOG LT - LH
RS5	10	1 (2)	061976	FR JCT BOX	CORNERING LT - LH
RS7	11	.82 (2)	060806	RR JCT BOX	PARKING BRAKE STOP LTS
RS8	10	1 (2)	061976	FR JCT BOX	CORNERING LT - RH
RS9	11	1 (2)	061976	RR JCT BOX	DOCKING LT - RH
RS10	11	1 (2)	061976	RR JCT BOX	DOCKING LT - LH
RS11	28	12	561191	FR TOP	DEFROSTER SPEED
RS12	28	12	561191	FR TOP	DEFROSTER SPEED
RS13	23	80	562108	FR TOP	FR DESTINATION SIGN
RS14	9	.82 (2)	060806	FR JCT BOX	DAYTIME RUN LTS
RS17	7	220	562498	ALARM JCT.BOX	FIRE ALARM

RESISTOR CODE (RS) Page J : 1

NO.	PAGE	OHM(S)	#PREVOST	LOCATION	FUNCTION
RS1	5	11 K	561898	FR JCT BOX	FAST IDLE DDEC CONTROL
RS2	5	3.6 K	561897	FR JCT BOX	FAST IDLE DDEC CONTROL
RS3	11	1 (2)	561537	FR SERV. COMPT.	FOG LT - RH
RS4	11	1 (2)	561537	FR SERV. COMPT.	FOG LT - LH
RS5	10	1 (2)	061976	FR JCT BOX	CORNERING LT - LH
RS7	11	.82 (2)	060806	RR JCT BOX	PARKING BRAKE STOP LTS
RS8	10	1 (2)	061976	FR JCT BOX	CORNERING LT - RH
RS9	11	1 (2)	061976	RR JCT BOX	DOCKING LT - RH
RS10	11	1 (2)	061976	RR JCT BOX	DOCKING LT - LH
RS11	28	12	561191	FR TOP	DEFROSTER SPEED
RS12	28	12	561191	FR TOP	DEFROSTER SPEED
RS13	23	80	562108	FR TOP	FR DESTINATION SIGN
RS14	9	.82 (2)	060806	FR JCT BOX	DAYTIME RUN LTS
RS17	7	220	562498	ALARM JCT.BOX	FIRE ALARM
RS18	8	75 K	064208	RR JCT BOX	FAN CLUTCH W/RETARDER

RESISTOR CODE (RS) Page J : 1

NO.	PAGE	OHM(S)	#PREVOST	LOCATION	FUNCTION

RESISTOR CODE (RS) Page J : 1

NO.	PAGE	OHM(S)	#PREVOST	LOCATION	FUNCTION
RS1	5	11 K	561898	FR JCT BOX	FAST IDLE DDEC CONTROL
RS2	5	3.6 K	561897	FR JCT BOX	FAST IDLE DDEC CONTROL
RS3	11	1 (2)	561537	FR SERV. COMPT.	FOG LT - RH
RS4	11	1 (2)	561537	FR SERV. COMPT.	FOG LT - LH
RS5	10	1 (2)	061976	FR JCT BOX	CORNERING LT - LH
RS7	11	.82 (2)	060806	RR JCT BOX	PARKING BRAKE STOP LTS
RS8	10	1 (2)	061976	FR JCT BOX	CORNERING LT - RH
RS9	11	1 (2)	061976	RR JCT BOX	DOCKING LT - RH
RS10	11	1 (2)	061976	RR JCT BOX	DOCKING LT - LH
RS11	28	12	561191	FR TOP	DEFROSTER SPEED
RS12	28	12	561191	FR TOP	DEFROSTER SPEED
RS13	23	80	562108	FR TOP	FR DESTINATION SIGN
RS14	9	.82 (2)	060806	FR JCT BOX	DAYTIME RUN LTS
RS17	7	220	562498	ALARM JCT.BOX	FIRE ALARM
RS18	8	75 K	064208	RR JCT BOX	FAN CLUTCH W/RETARDER
RS20	21	1 K	562470	RR JCT BOX	WORLD TR. SPEED TO DDEC III
RS21	19	3.32 K	562617	A/C JCT BOX	A/C FRESH AIR RESISTOR

RESISTOR CODE (RS) Page J : 1

NO. PAGE OHM(S) #PREVOST LOCATION FUNCTION

WIRING DIAGRAM KEYS

24-85B-16
- GAUGE
- CIRCUIT NUMBER
- CIRCUIT VOLTAGE

WIRE CROSSING

WIRE SOLDERING JOINT

SHIELDED WIRES

TWISTED WIRES

STUD TERMINAL

JUNCTION BLOCK

DUMMY

FS — FROM GROUND STUD GROUND SECTION

CHASSIS GROUND

ACCESSORY CHASSIS GROUND

C23 — CONNECTOR CODE NUMBER
5 — PIN TERMINAL, CAVITY NUMBER, SOCKET TERMINAL

TELL-TALE LAMP

ILLUMINATING LAMP

FLUORESCENT LAMP

D3 — CODE NUMBER
ANODE — CATHODE — DIODE/RECTIFIER

RS2 — CODE NUMBER
4.3 KΩ — OHMS

RELAY S.P.D.T.
SINGLE POLE, DOUBLE THROW
SUPPRESSOR DIODE

CODE NUMBER → R2
COIL <85 — 86> COIL
N.O. <87 — 30> COM.
N.C. <87A

RELAY S.P.S.T.
SINGLE POLE, SINGLE THROW
SUPPRESSOR DIODE

CODE NUMBER → R2
COIL <85 — 86> COIL
N.O. <87 — 30> COM.

RELAY S.P.D.T.
SINGLE POLE, DOUBLE THROW

CODE NUMBER → R2
COIL <85 — 86> COIL
N.O. <87 — 30> COM.
N.C. <87A

CODE NUMBER → R2
RELAY-MAGNETIC
D.P.D.T.
DOUBLE POLE, DOUBLE THROW
COIL — COIL
COM. — N.O.
COM. — N.C.
BAT.

CODE NUMBER → R2
RELAY-MAGNETIC
S.P.S.T.
SINGLE POLE, SINGLE THROW
COIL — COIL
COM. — N.O.
BAT.

7.5 — AMPACITY
FUSE

CB23 — CIRCUIT BREAKER CODE NUMBER
10A — AMPACITY

N.O. / N.C. / COM. — SWITCH S.P.D.T.
SINGLE POLE, DOUBLE THROW

PRESSURE SWITCH N.C.

PRESSURE SWITCH N.O.

SWITCH
MOMENTARY CONTACT

SWITCH
PUSH BUTTON

SWITCH
MECHANICAL LOCK
LOCK

M — ELECTRIC MOTOR

110V EXTERIOR
PLUG RECEPTACLE

ELECTRIC HORN

THERMOSTAT

HEATER

SOLENOID VALVE

BATTERY

FR. JCT BOX - JUNCTION BLOCK

RR. JCT BOX - JUNCTION BLOCK

BAT. JCT PANEL - JUNCTION BLOCK

BLK	BLACK
YEL	YELLOW
RED	RED
WH	WHITE
GRY	GREY
ORA	ORANGE
BLU	BLUE
GRN	GREEN
BRN	BROWN
PUR	PURPLE
PK	PINK

PREVOST CAR inc.	WIRING DIAGRAM	NO: D060869	P. K	REVISION 000

FUSE CODE (F)

Page F : 1

NO.	PAGE	AMPERE	#PREVOST	LOCATION	FUNCTION
F1	6	10A	562407	RR JCT BOX	WORLD TRANSMISSION 12V BATTERY
F2	6	10A	562407	RR JCT BOX	WORLD TRANSMISSION 12V IGNITION

FUSE CODE (F)

Page F : 1

NO. PAGE AMPERE #PREVOST LOCATION FUNCTION

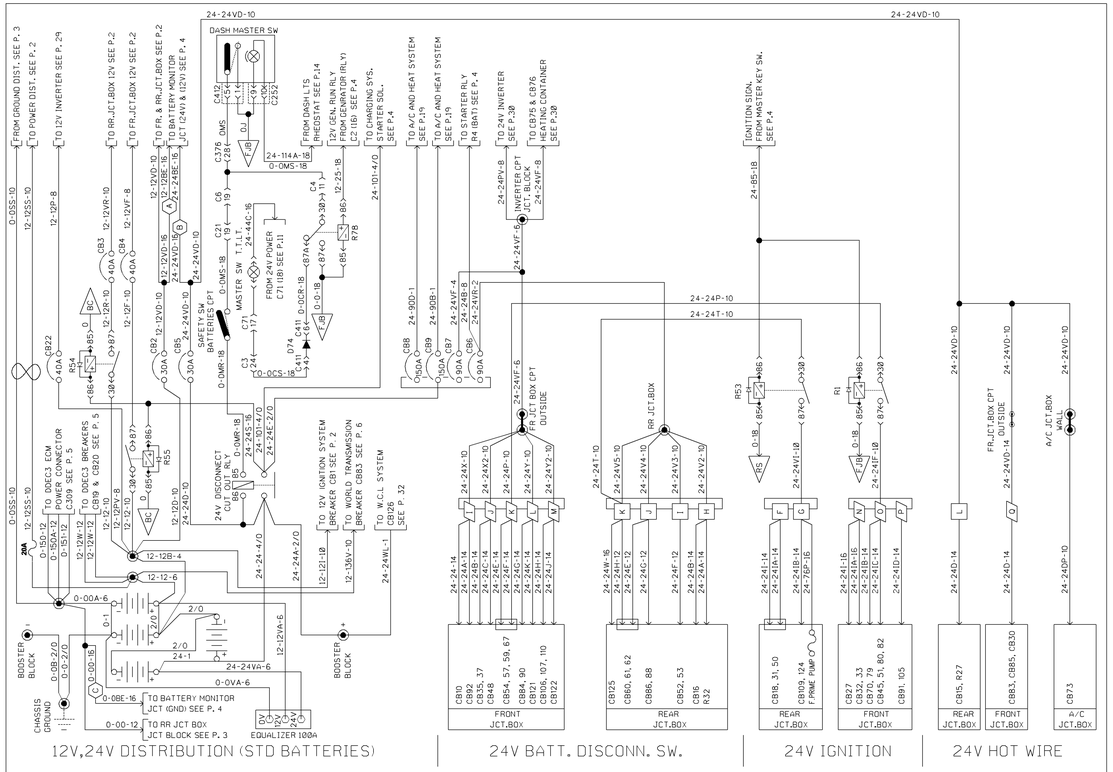
12V,24V DISTRIBUTION (STD BATTERIES)
24V BATT. DISCONN. SW.
24V IGNITION
24V HOT WIRE
DASH MASTER SW
SAFETY SW
BATTERIES PT
MASTER SW
24V DISCONNECT CUT OUT RLY
DDEC13 ECM
POWER CONNECTOR
CB39 & CB20 SEE P. 5
TO 12V IGNITION SYSTEM BREAKER CB1 SEE P. 2
TO WORLD TRANSMISSION BREAKER CB53 SEE P. 5
TO W.C.L. SYSTEM CB126 SEE P. 32
BOOSTER BLOCK
CHASSIS GROUND
TO BATTERY MONITOR JCT (GND) SEE P. 4
TO RR JCT BOX JCT BLOCK SEE P. 3
EQUALIZER 100A
FRONT JCT.BOX
REAR JCT.BOX
FR JCT.BOX (PT OUTSIDE)
A/C JCT.BOX (WALL)
PREVOST CAR inc.
WIRING DIAGRAM
NO: D060869
P. 1 ½
PRIOR
REVISION 000

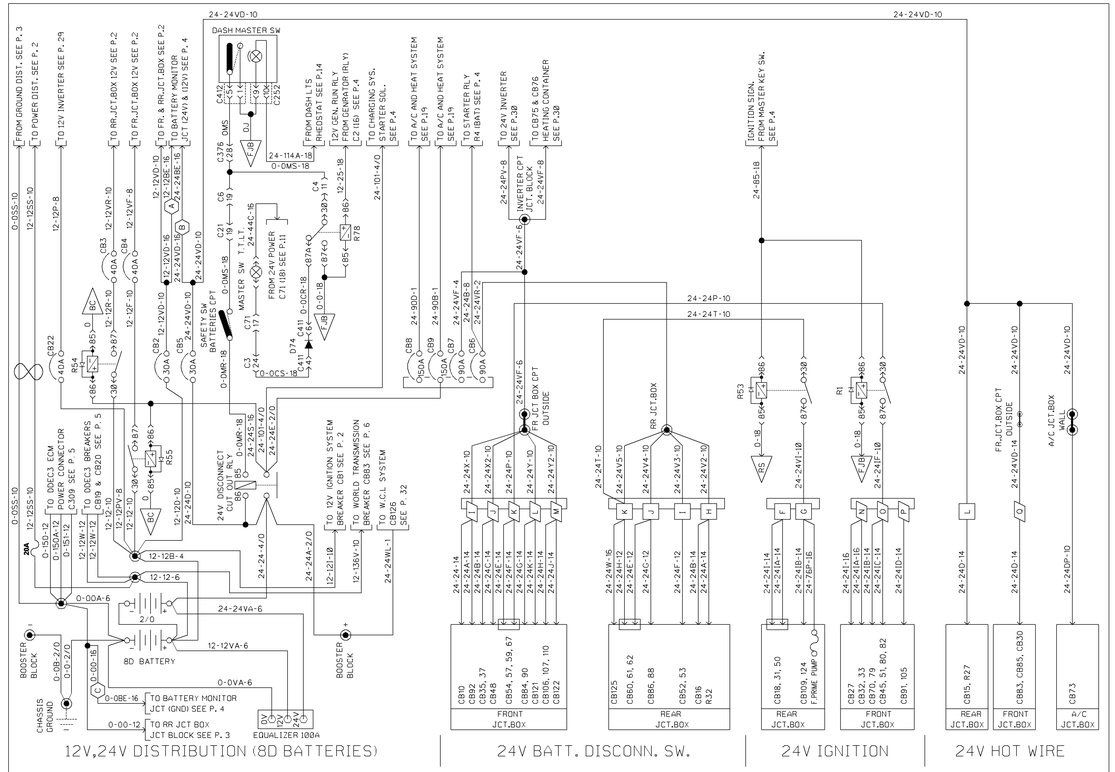
12V,24V DISTRIBUTION (8D BATTERIES)
24V BATT. DISCONN. SW.
24V IGNITION
24V HOT WIRE
DASH MASTER SW
SAFETY SW
BATTERIES PT
MASTER SW
24V DISCONNECT CUT OUT RLY
DDEC13 ECM
POWER CONNECTOR
CB39 & CB20 SEE P. 5
TO 12V IGNITION SYSTEM BREAKER CB1 SEE P. 2
TO WORLD TRANSMISSION BREAKER CB53 SEE P. 5
TO W.C.L. SYSTEM CB126 SEE P. 32
8D BATTERY
BOOSTER BLOCK
CHASSIS GROUND
TO BATTERY MONITOR JCT (GND) SEE P. 4
TO RR JCT BOX JCT BLOCK SEE P. 3
EQUALIZER 100A
FRONT JCT.BOX
REAR JCT.BOX
FR JCT.BOX (PT OUTSIDE)
A/C JCT.BOX (WALL)
PREVOST CAR inc.
WIRING DIAGRAM
NO: D060869
P. 1b 2/2
PRIOR
REVISION 000

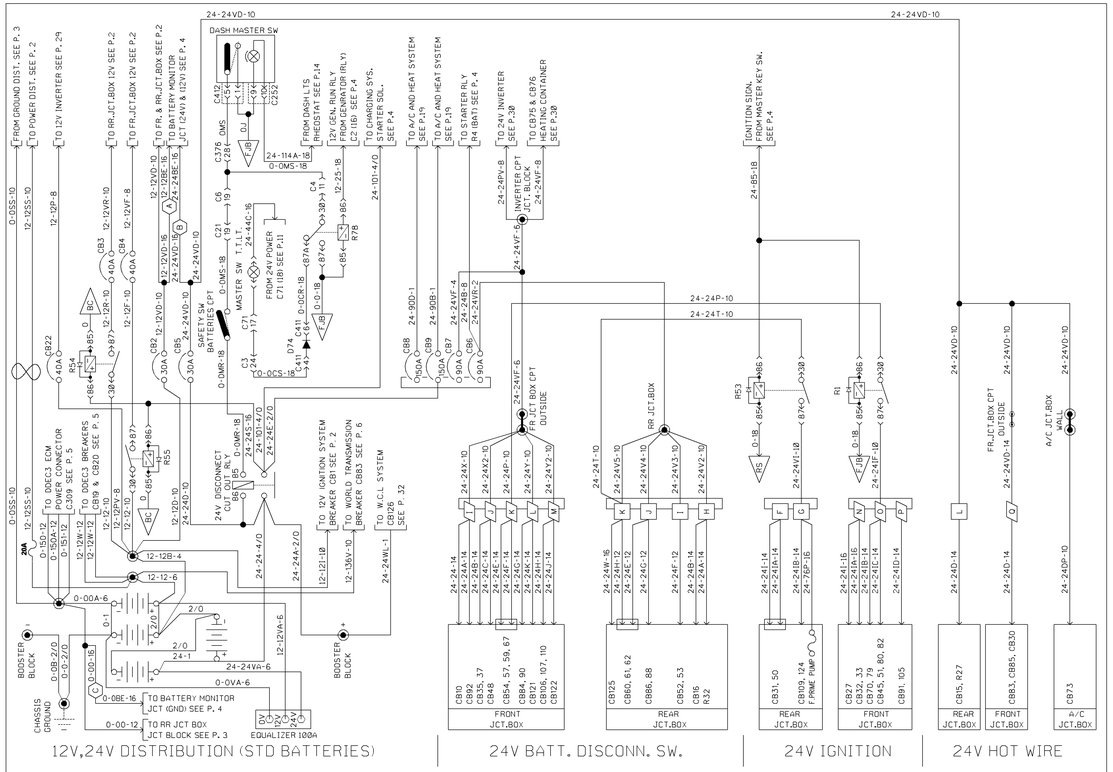

PREVOST CAR inc. | WIRING DIAGRAM | NO: D060869 | P. 1½ PRIOR | REVISION 006

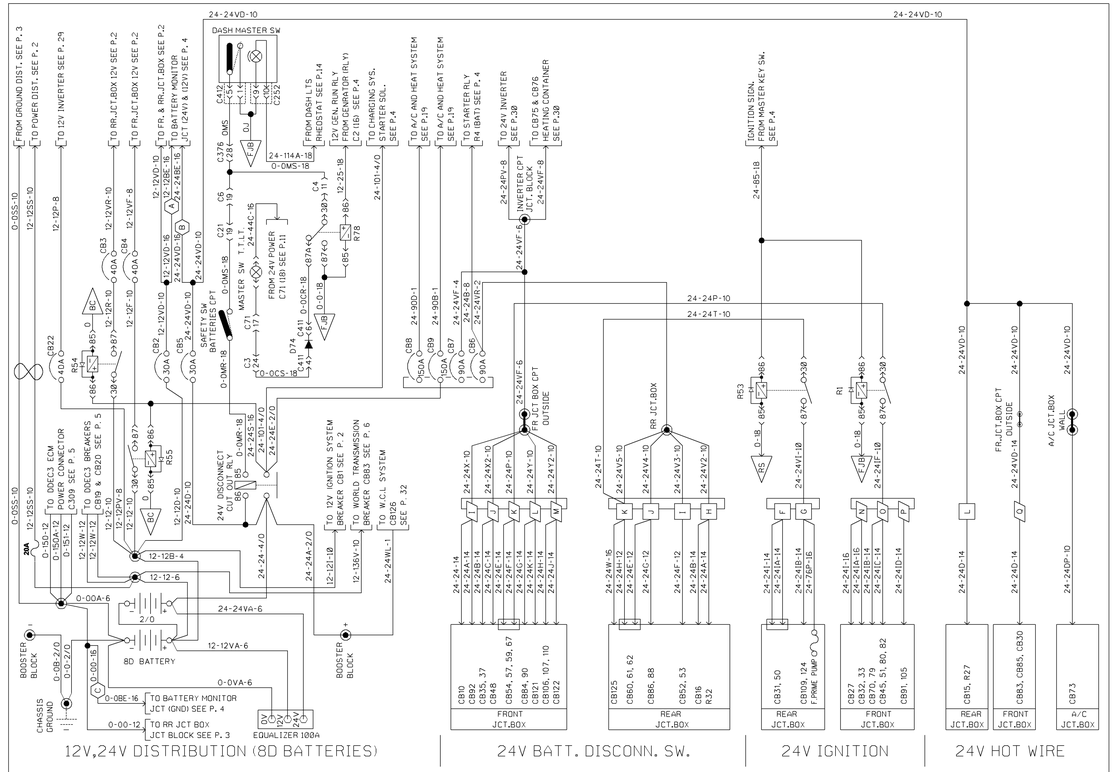

PREVOST CAR inc. | WIRING DIAGRAM | NO: D060869 | P. 1 2/2 PRIOR | REVISION 006

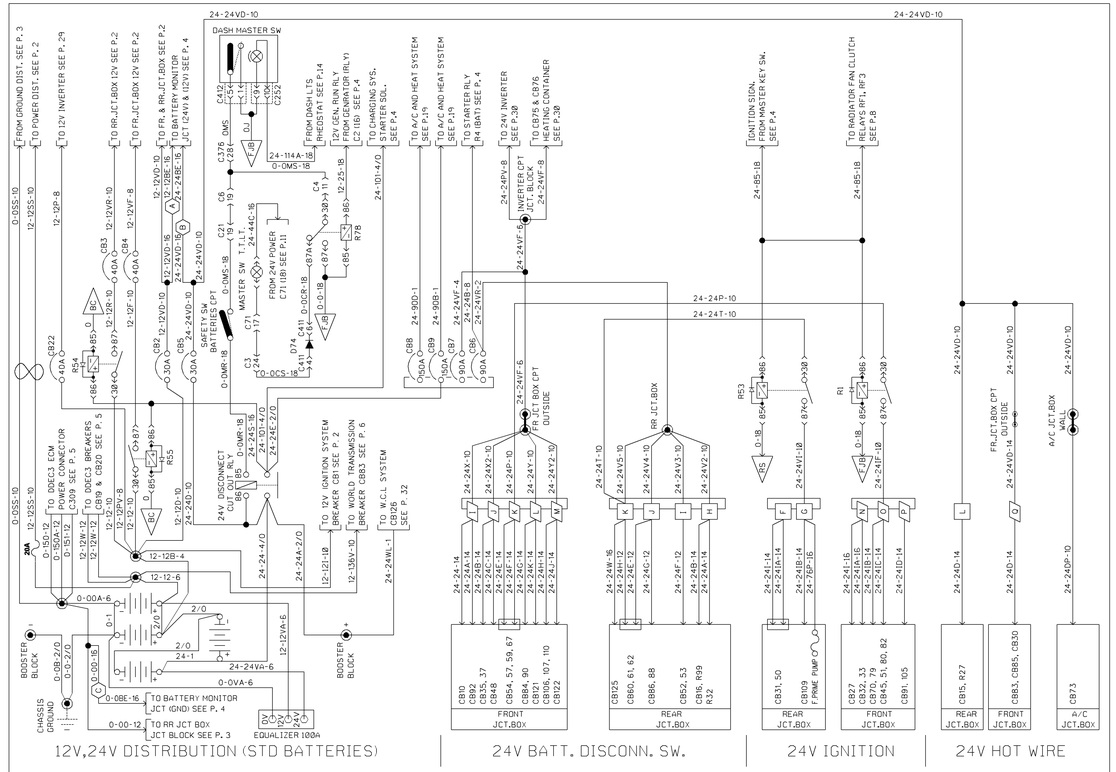
12V,24V DISTRIBUTION (STD BATTERIES)
24V BATT. DISCONN. SW.
24V IGNITION
24V HOT WIRE
DASH MASTER SW
SAFETY SW BATTERIES CPT
MASTER SW
FROM 24V POWER C7 (1B) SEE P.11
24V DISCONNECT CUTOUT RLY
TO DDEC3 ECM
POWER CONNECTOR
C309 SEE P. 5
TO DDEC3 BREAKERS
CB9 & CB20 SEE P. 5
TO 12V IGNITION SYSTEM
BREAKER CB1 SEE P. 2
TO WORLD TRANSMISSION
BREAKER CB83 SEE P. 5
TO W.C.L. SYSTEM
CB126
SEE P. 32
BOOSTER BLOCK
CHASSIS GROUND
TO BATTERY MONITOR
JCT (GND) SEE P. 4
TO RR JCT BOX
JCT BLOCK SEE P. 3
EQUALIZER 100A
FRONT JCT.BOX
REAR JCT.BOX
A/C JCT.BOX
FRONT PUMP
FRONT JCT.BOX OUTSIDE
RR JCT.BOX
FR JCT.BOX (PT) OUTSIDE
A/C JCT.BOX WALL

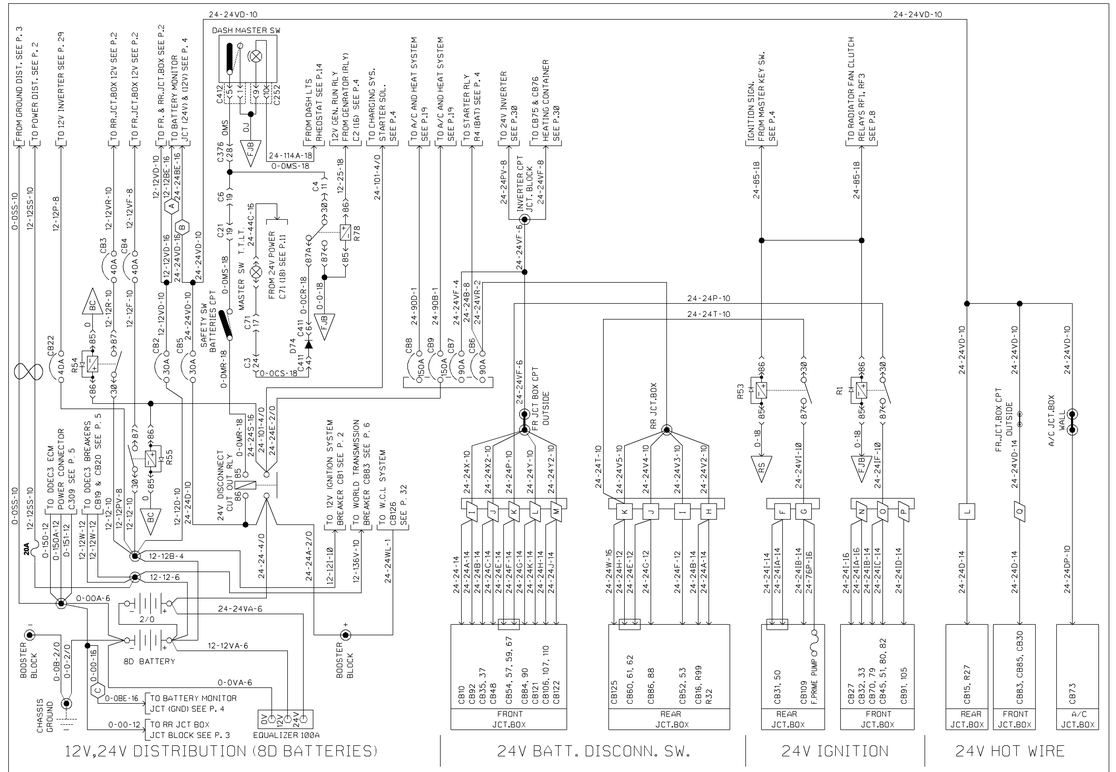
12V,24V DISTRIBUTION (8D BATTERIES)
24V BATT. DISCONN. SW.
24V IGNITION
24V HOT WIRE
DASH MASTER SW
SAFETY SW BATTERIES CPT
MASTER SW
FROM 24V POWER C7 (1B) SEE P.11
24V DISCONNECT CUTOUT RLY
TO DDEC3 ECM
POWER CONNECTOR
C309 SEE P. 5
TO DDEC3 BREAKERS
CB9 & CB20 SEE P. 5
TO 12V IGNITION SYSTEM
BREAKER CB1 SEE P. 2
TO WORLD TRANSMISSION
BREAKER CB83 SEE P. 5
TO W.C.L. SYSTEM
CB126
SEE P. 32
8D BATTERY
BOOSTER BLOCK
CHASSIS GROUND
TO BATTERY MONITOR
JCT (GND) SEE P. 4
TO RR JCT BOX
JCT BLOCK SEE P. 3
EQUALIZER 100A
FRONT JCT.BOX
REAR JCT.BOX
A/C JCT.BOX
FRONT PUMP
FRONT JCT.BOX OUTSIDE
RR JCT.BOX
FR JCT.BOX (PT) OUTSIDE
A/C JCT.BOX WALL

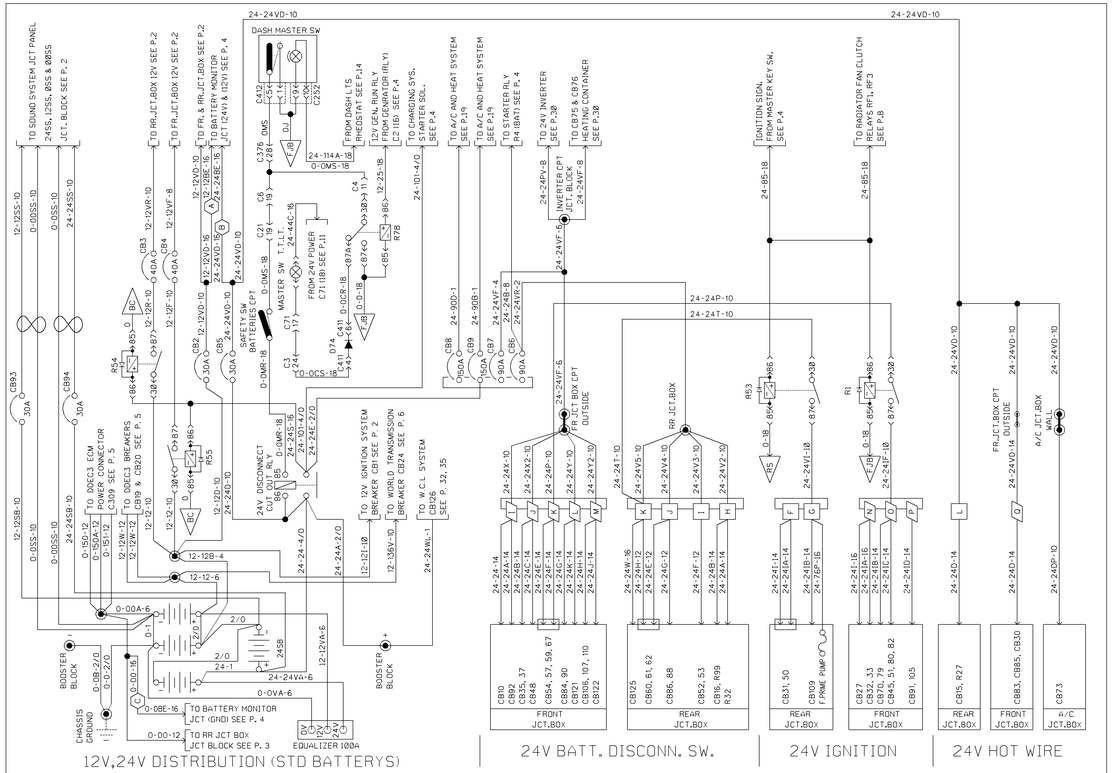

PREVOST CAR inc. | WIRING DIAGRAM | NO: D060869 | P. 1 ½ | REVISION 017

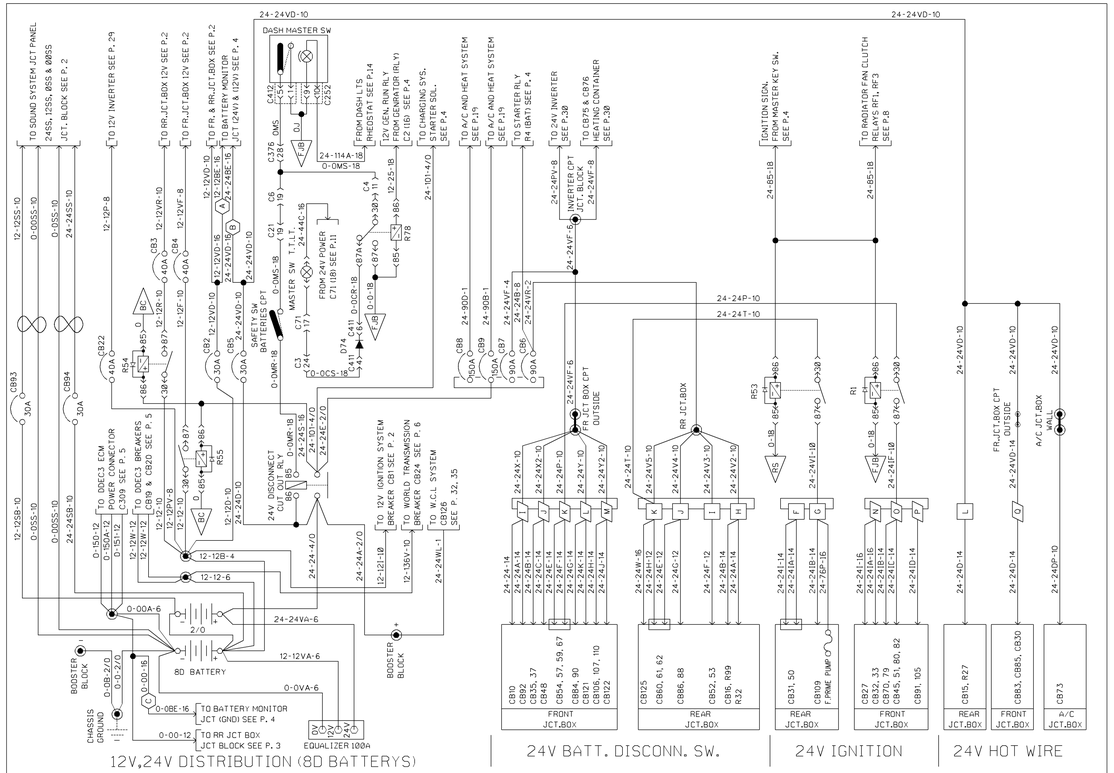

PREVOST CAR inc. | WIRING DIAGRAM | NO: D060869 | P. 1 2/2 | REVISION 017

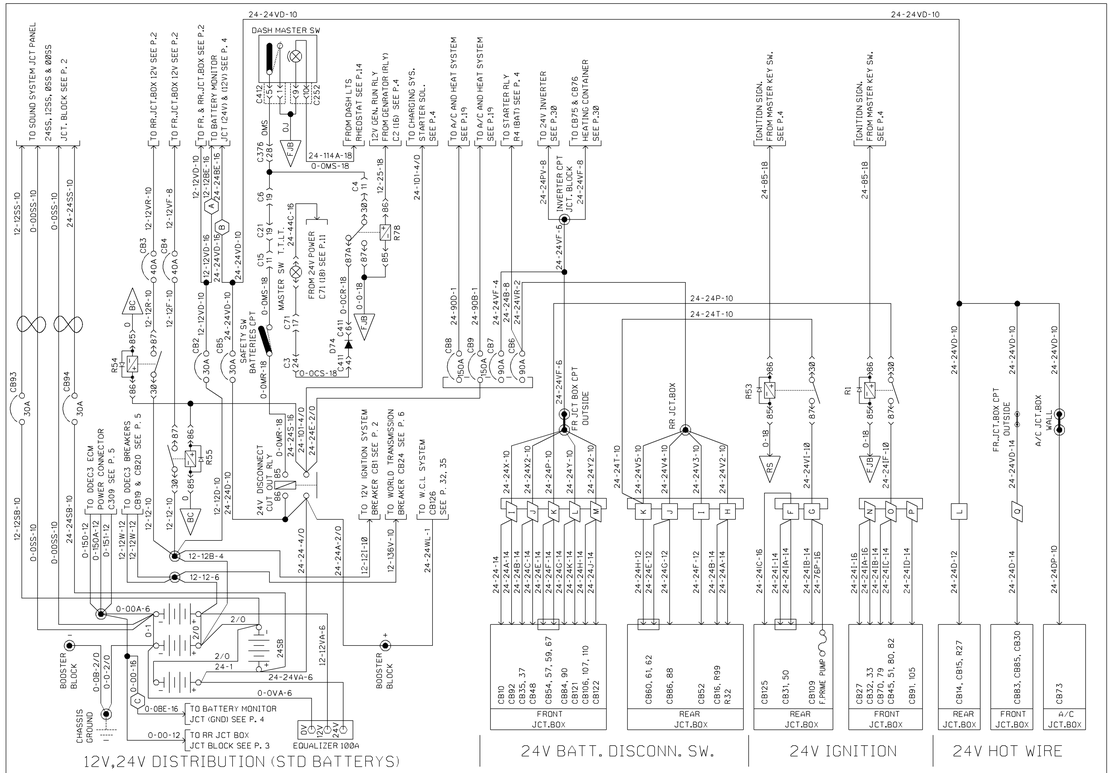

12V,24V DISTRIBUTION (STD BATTERYS)

PREVOST CAR inc. | WIRING DIAGRAM | NO: D060869 | P. 1 ½ | REVISION 021

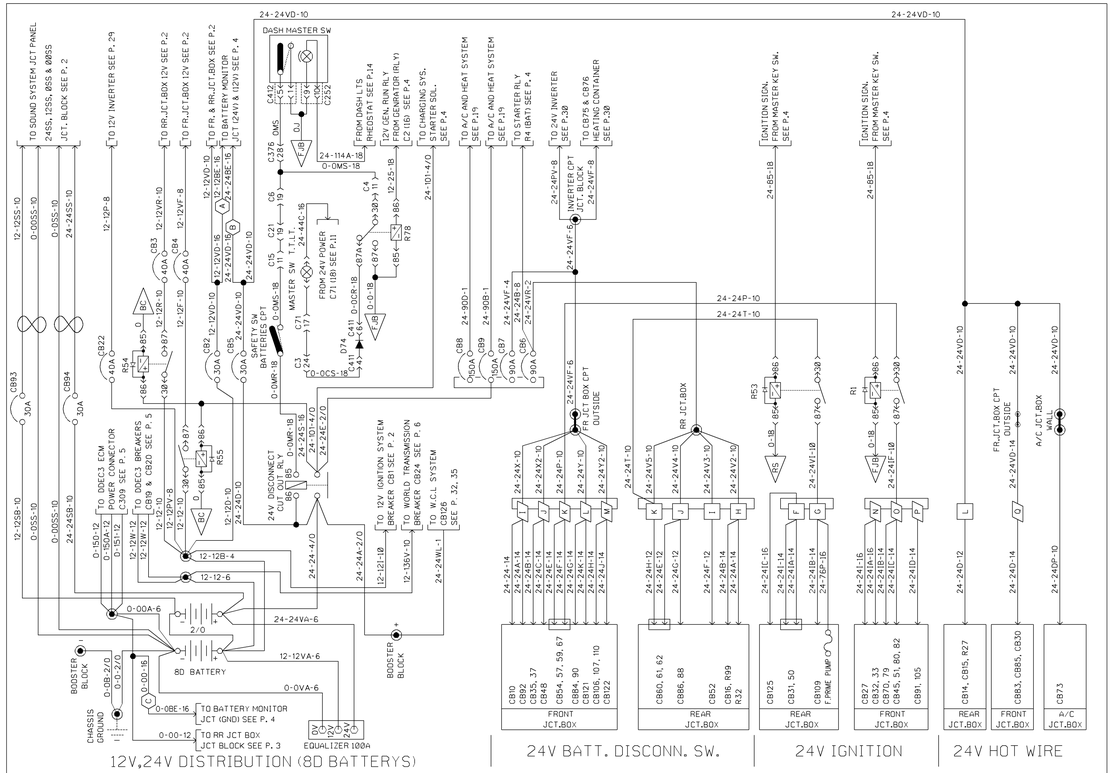

12V,24V DISTRIBUTION (8D BATTERYS)

PREVOST CAR inc. | WIRING DIAGRAM | NO: D060869 | P. 1 2/2 | REVISION 021

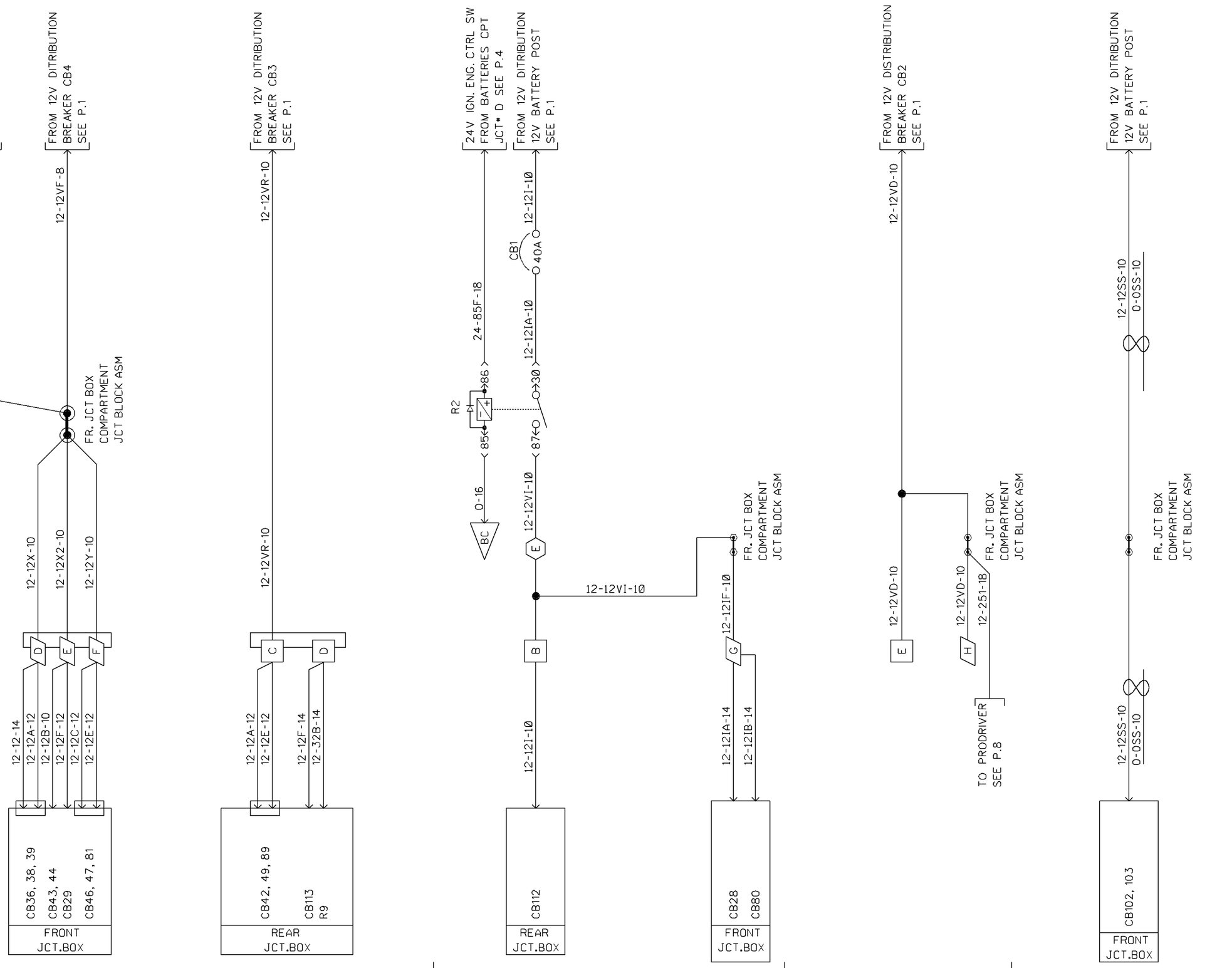

12V BATT. DISCONN. SW. | 12V IGNITION | 12V HOT WIRE | 12V SOUND SYSTEM

PREVOST CAR inc.	WIRING DIAGRAM	NO: D060869	P. 2	REVISION 001

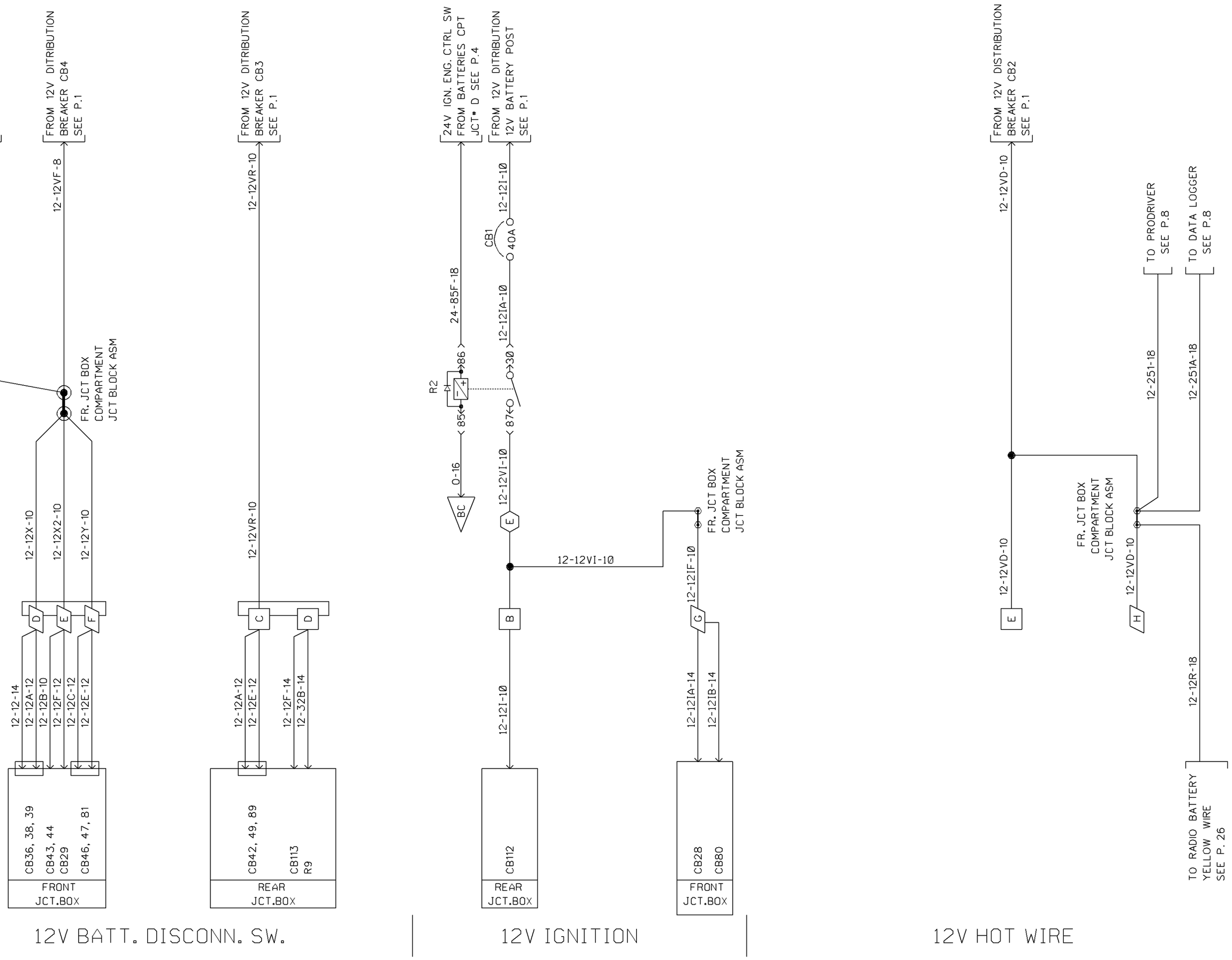

PREVOST CAR inc.	WIRING DIAGRAM	NO: D060869	P. 2	REVISION 014

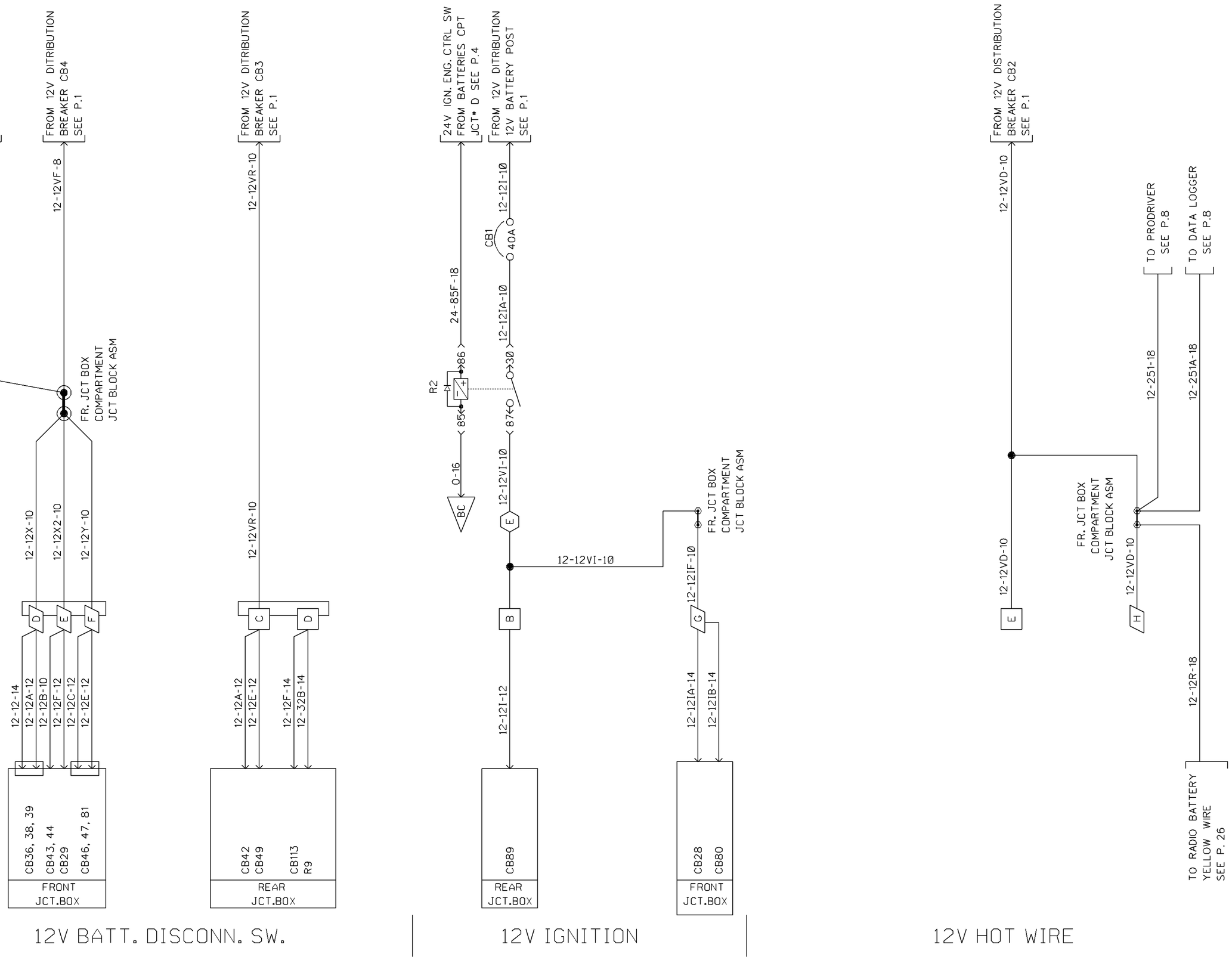

PREVOST CAR inc.	WIRING DIAGRAM	NO: D060869	P. 2	REVISION 021

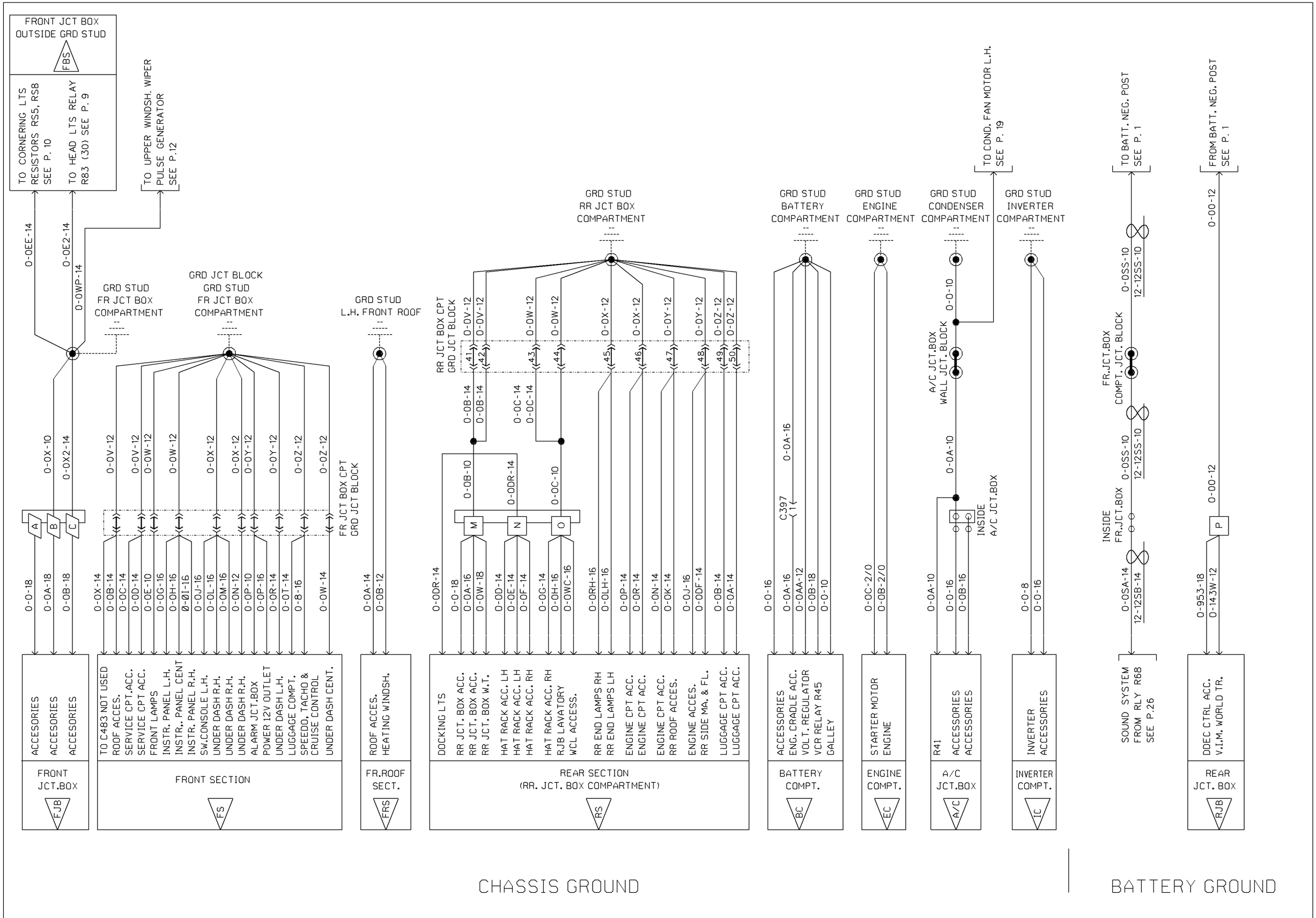

PREVOST CAR inc.	WIRING DIAGRAM	NO: D060869	P. 3	REVISION 001

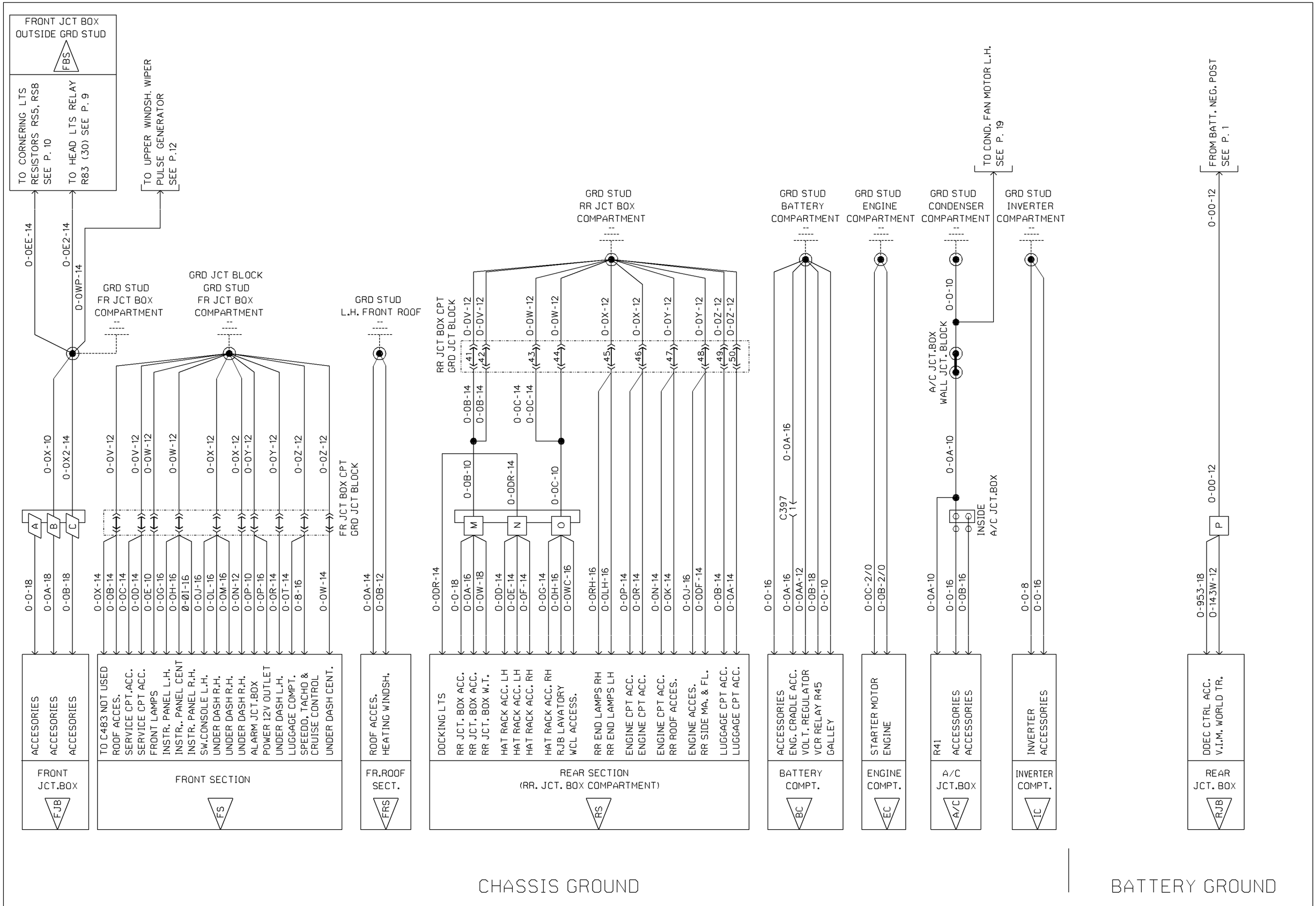
FRONT JCT BOX
OUTSIDE GRD STUD
FBS
TO CORNERING LTS RESISTORS RS5, RS8 SEE P. 10
TO HEAD LTS RELAY R83 (30) SEE P. 9
TO UPPER WINDSH. WIPER PULSE GENERATOR SEE P.12
TO COND. FAN MOTOR L.H. SEE P. 19
FROM BATT. NEG. POST SEE P. 1
GRD STUD FR JCT BOX COMPARTMENT
GRD JCT BLOCK GRD STUD FR JCT BOX COMPARTMENT
GRD STUD L.H. FRONT ROOF
GRD STUD RR JCT BOX COMPARTMENT
GRD STUD BATTERY COMPARTMENT
GRD STUD ENGINE COMPARTMENT
GRD STUD CONDENSER COMPARTMENT
GRD STUD INVERTER COMPARTMENT
RR JCT BOX CPT GRD JCT BLOCK
FR JCT BOX CPT GRD JCT BLOCK
A/C JCT.BOX WALL JCT. BLOCK
INSIDE A/C JCT.BOX
ACCESORIES
ACCESORIES
ACCESORIES
FRONT JCT.BOX
FJB
TO C483 NOT USED
ROOF ACCES.
SERVICE CPT.ACC.
SERVICE CPT ACC.
FRONT LAMPS
INSTR. PANEL L.H.
INSTR. PANEL CENT
INSTR. PANEL R.H.
SW.CONSOLE L.H.
UNDER DASH R.H.
UNDER DASH R.H.
UNDER DASH R.H.
ALARM JCT.BOX
POWER 12V OUTLET
UNDER DASH L.H.
LUGGAGE COMPT.
SPEEDO, TACHO & CRUISE CONTROL
UNDER DASH CENT.
FRONT SECTION
FS
ROOF ACCES.
HEATING WINDSH.
FR.ROOF SECT.
FRS
DOCKING LTS
RR JCT. BOX ACC.
RR JCT. BOX ACC.
RR JCT. BOX W.T.
HAT RACK ACC. LH
HAT RACK ACC. LH
HAT RACK ACC. RH
HAT RACK ACC. RH
RJB LAVATORY
WCL ACCESS.
RR END LAMPS RH
RR END LAMPS LH
ENGINE CPT ACC.
ENGINE CPT ACC.
ENGINE CPT ACC.
RR ROOF ACCES.
ENGINE ACCES.
RR SIDE MA. & FL.
LUGGAGE CPT ACC.
LUGGAGE CPT ACC.
REAR SECTION
(RR. JCT. BOX COMPARTMENT)
RS
ACCESSORIES
ENG. CRADLE ACC.
VOLT. REGULATOR
VCR RELAY R45
GALLEY
BATTERY COMPT.
BC
STARTER MOTOR
ENGINE
ENGINE COMPT.
EC
R41
ACCESSORIES
ACCESSORIES
A/C JCT.BOX
A/C
INVERTER
ACCESSORIES
INVERTER COMPT.
IC
DDEC CTRL ACC.
V.I.M. WORLD TR.
REAR JCT. BOX
RJB
CHASSIS GROUND
BATTERY GROUND

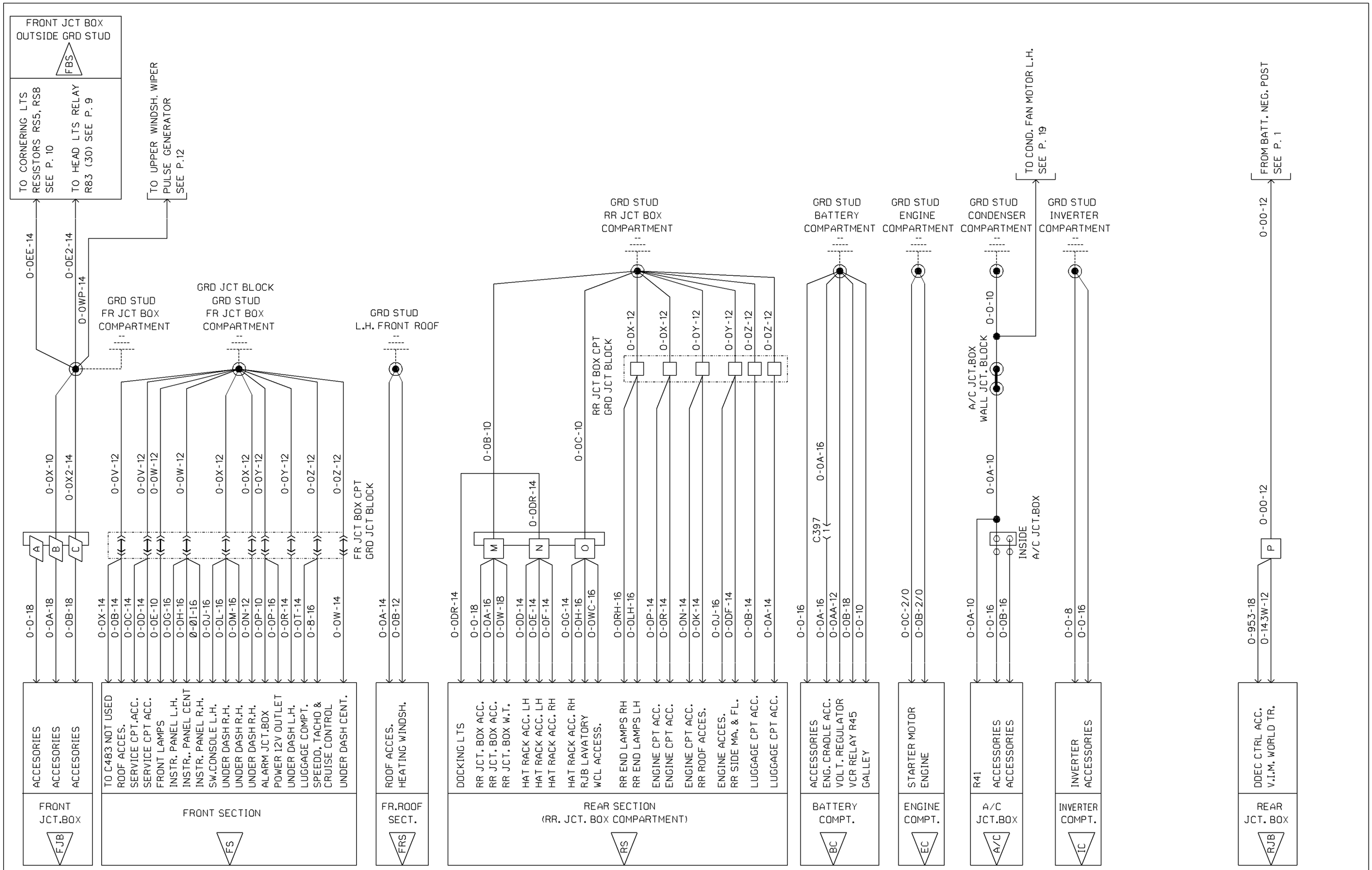
FRONT JCT BOX
OUTSIDE GRD STUD
FBS
TO CORNERING LTS RESISTORS RS5, RS8 SEE P. 10
TO HEAD LTS RELAY R83 (30) SEE P. 9
TO UPPER WINDSH. WIPER PULSE GENERATOR SEE P.12
TO COND. FAN MOTOR L.H. SEE P. 19
FROM BATT. NEG. POST SEE P. 1
GRD STUD FR JCT BOX COMPARTMENT
GRD JCT BLOCK GRD STUD FR JCT BOX COMPARTMENT
GRD STUD L.H. FRONT ROOF
GRD STUD RR JCT BOX COMPARTMENT
GRD STUD BATTERY COMPARTMENT
GRD STUD ENGINE COMPARTMENT
GRD STUD CONDENSER COMPARTMENT
GRD STUD INVERTER COMPARTMENT
RR JCT BOX CPT GRD JCT BLOCK
FR JCT BOX CPT GRD JCT BLOCK
A/C JCT.BOX WALL JCT. BLOCK
INSIDE A/C JCT.BOX
C397
FRONT JCT.BOX
FJB
ACCESORIES
ACCESORIES
ACCESORIES
FRONT SECTION
FS
TO C483 NOT USED
ROOF ACCES.
SERVICE CPT.ACC.
SERVICE CPT ACC.
FRONT LAMPS
INSTR. PANEL L.H.
INSTR.. PANEL CENT
INSTR. PANEL R.H.
SW.CONSOLE L.H.
UNDER DASH R.H.
UNDER DASH R.H.
UNDER DASH R.H.
ALARM JCT.BOX
POWER 12V OUTLET
UNDER DASH L.H.
LUGGAGE COMPT.
SPEEDO, TACHO & CRUISE CONTROL
UNDER DASH CENT.
FR.ROOF SECT.
FRS
ROOF ACCES.
HEATING WINDSH.
REAR SECTION (RR. JCT. BOX COMPARTMENT)
RS
DOCKING LTS
RR JCT. BOX ACC.
RR JCT. BOX ACC.
RR JCT. BOX W.T.
HAT RACK ACC. LH
HAT RACK ACC. LH
HAT RACK ACC. RH
HAT RACK ACC. RH
RJB LAVATORY
WCL ACCESS.
RR END LAMPS RH
RR END LAMPS LH
ENGINE CPT ACC.
ENGINE CPT ACC.
ENGINE CPT ACC.
RR ROOF ACCES.
ENGINE ACCES.
RR SIDE MA. & FL.
LUGGAGE CPT ACC.
LUGGAGE CPT ACC.
BATTERY COMPT.
BC
ACCESSORIES
ENG. CRADLE ACC.
VOLT. REGULATOR
VCR RELAY R45
GALLEY
ENGINE COMPT.
EC
STARTER MOTOR
ENGINE
A/C JCT.BOX
A/C
R41
ACCESSORIES
ACCESSORIES
INVERTER COMPT.
IC
INVERTER
ACCESSORIES
REAR JCT. BOX
RJB
DDEC CTRL ACC.
V.I.M. WORLD TR.
CHASSIS GROUND
BATTERY GROUND

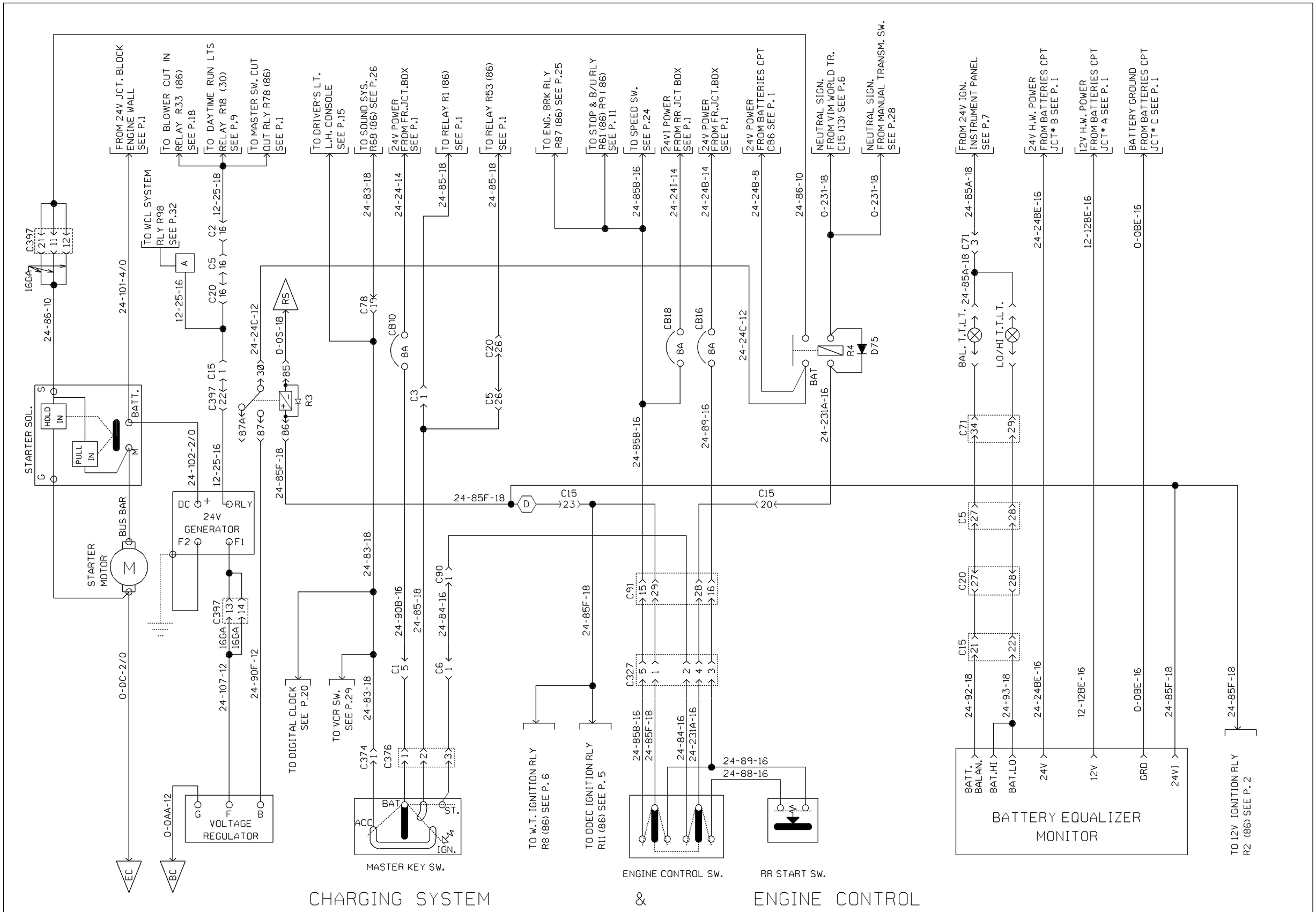

PREVOST CAR inc.	WIRING DIAGRAM	NO: D060869	P. 4 PRIOR	REVISION 004

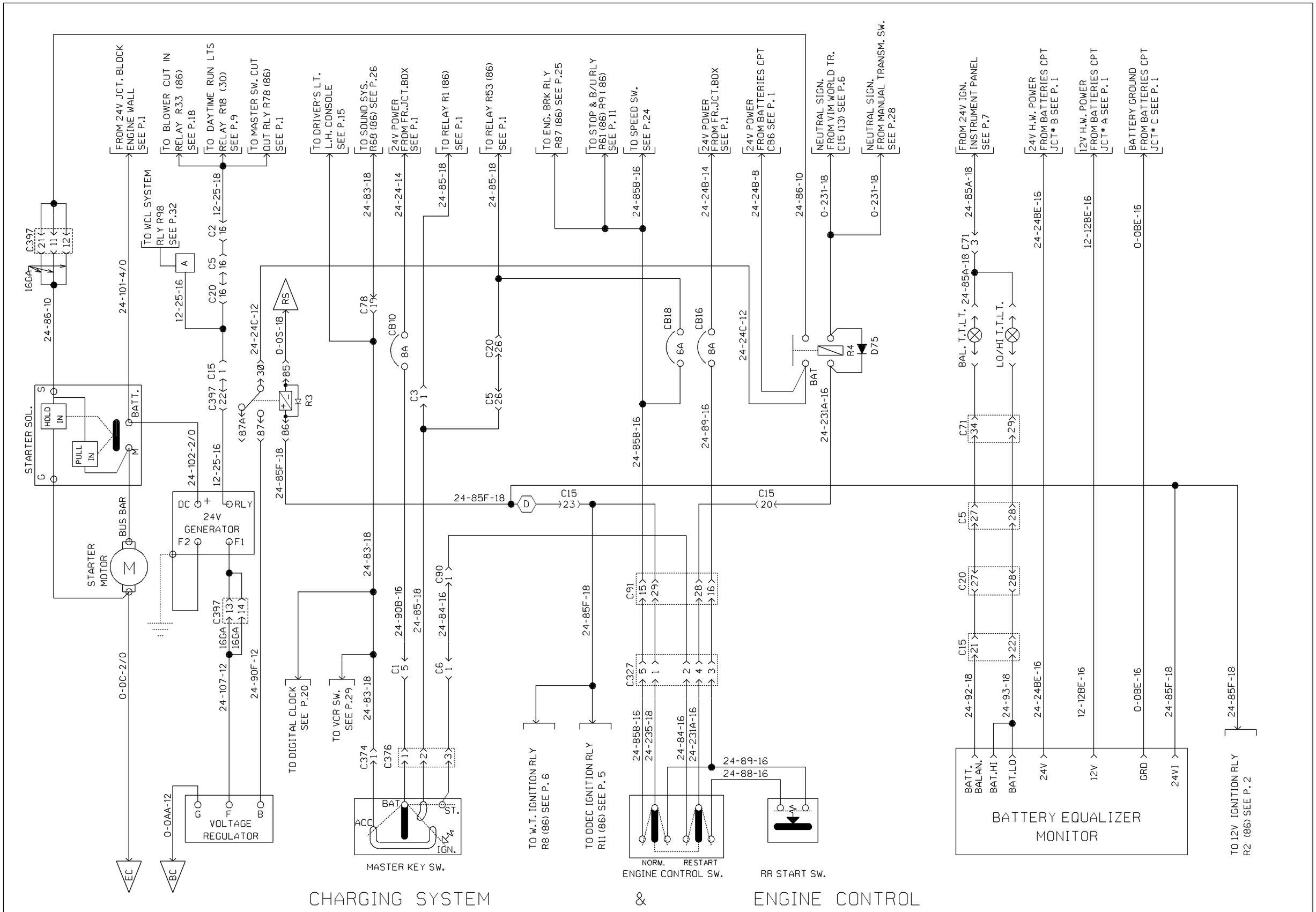

PREVOST CAR inc.	WIRING DIAGRAM	NO: D060869	P. 4 PRIOR	REVISION 006

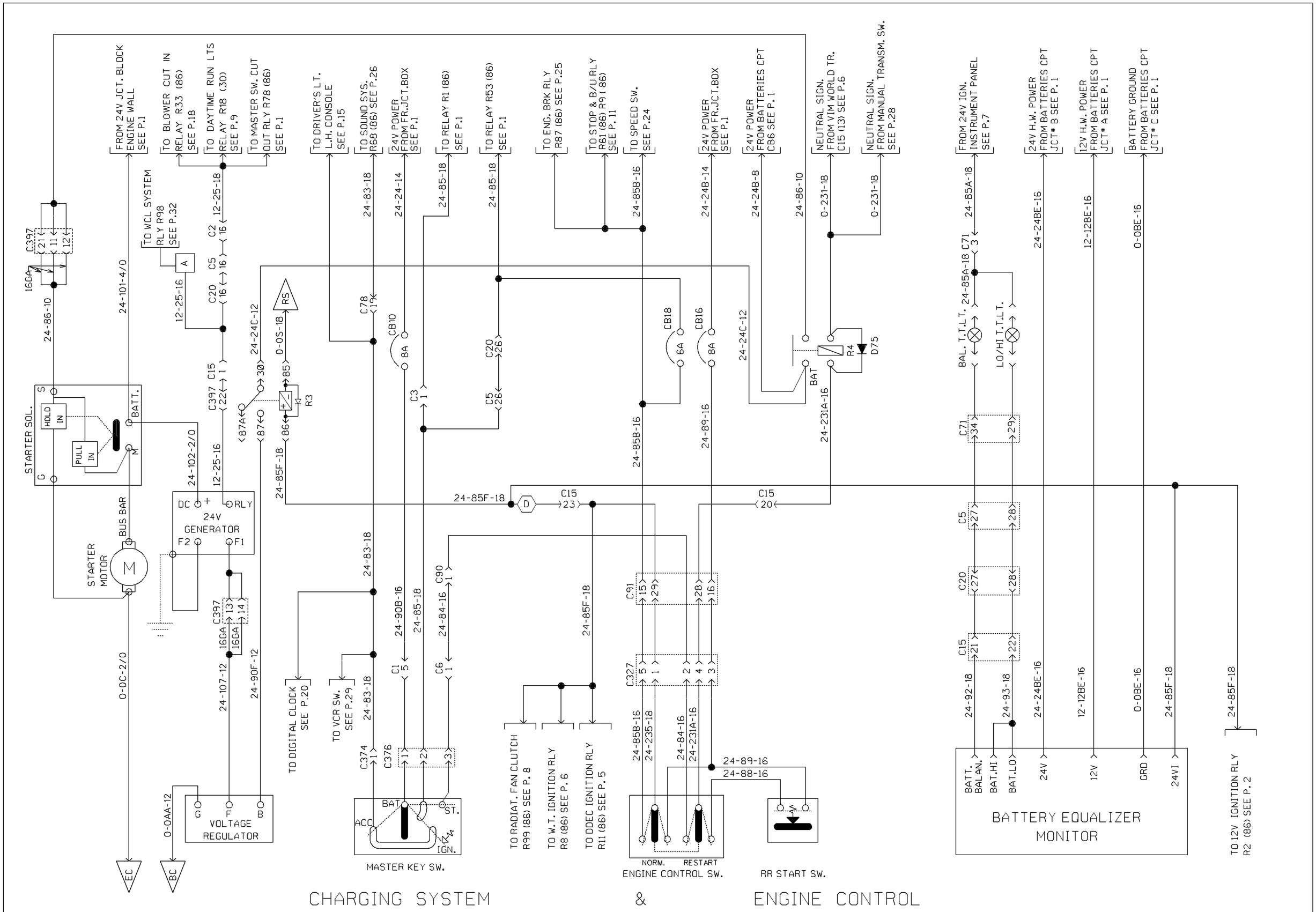

PREVOST CAR inc.	WIRING DIAGRAM	NO: D060869	P. 4	REVISION 008

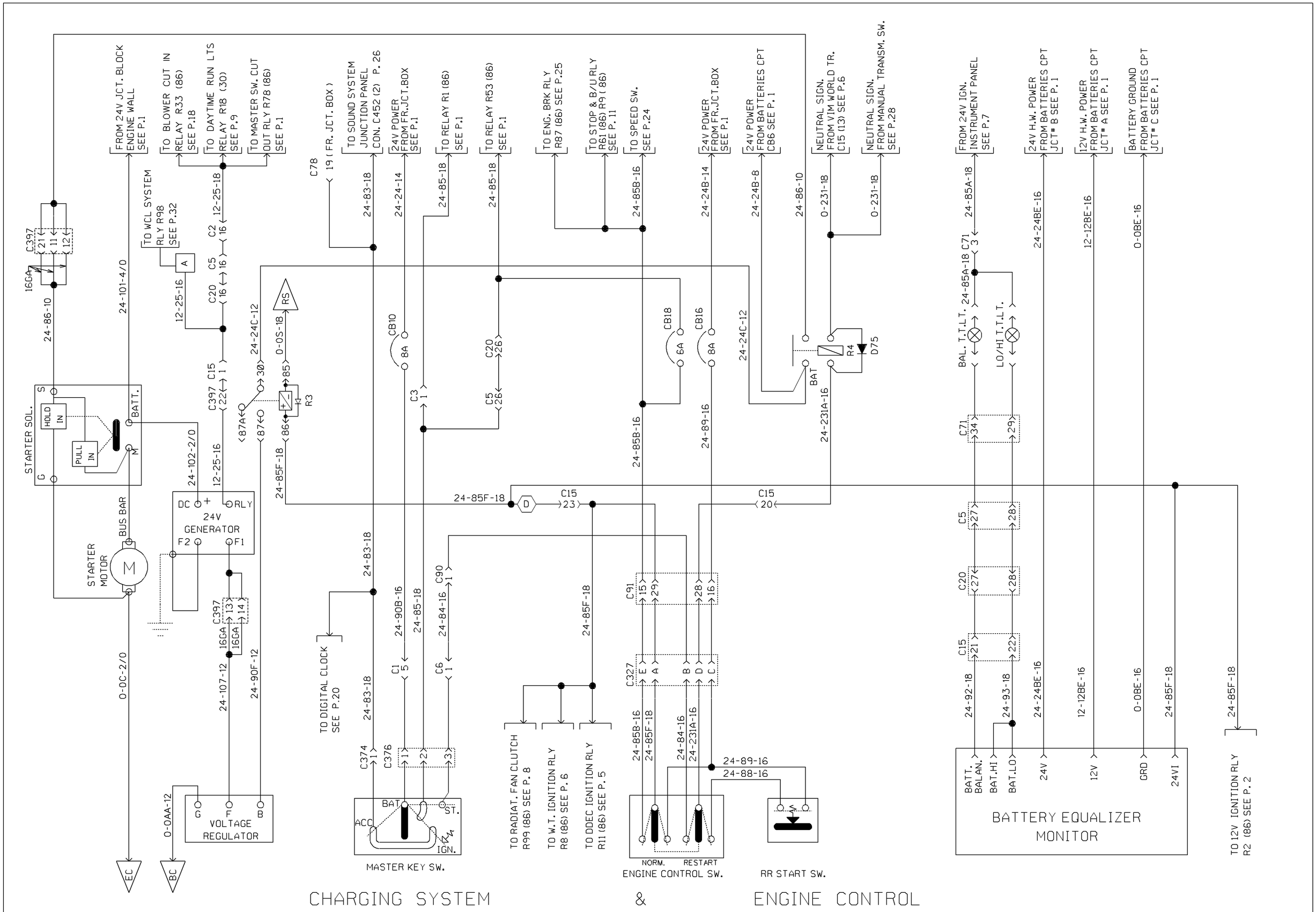

PREVOST CAR inc.	WIRING DIAGRAM	NO: D060869	P. 4	REVISION 014

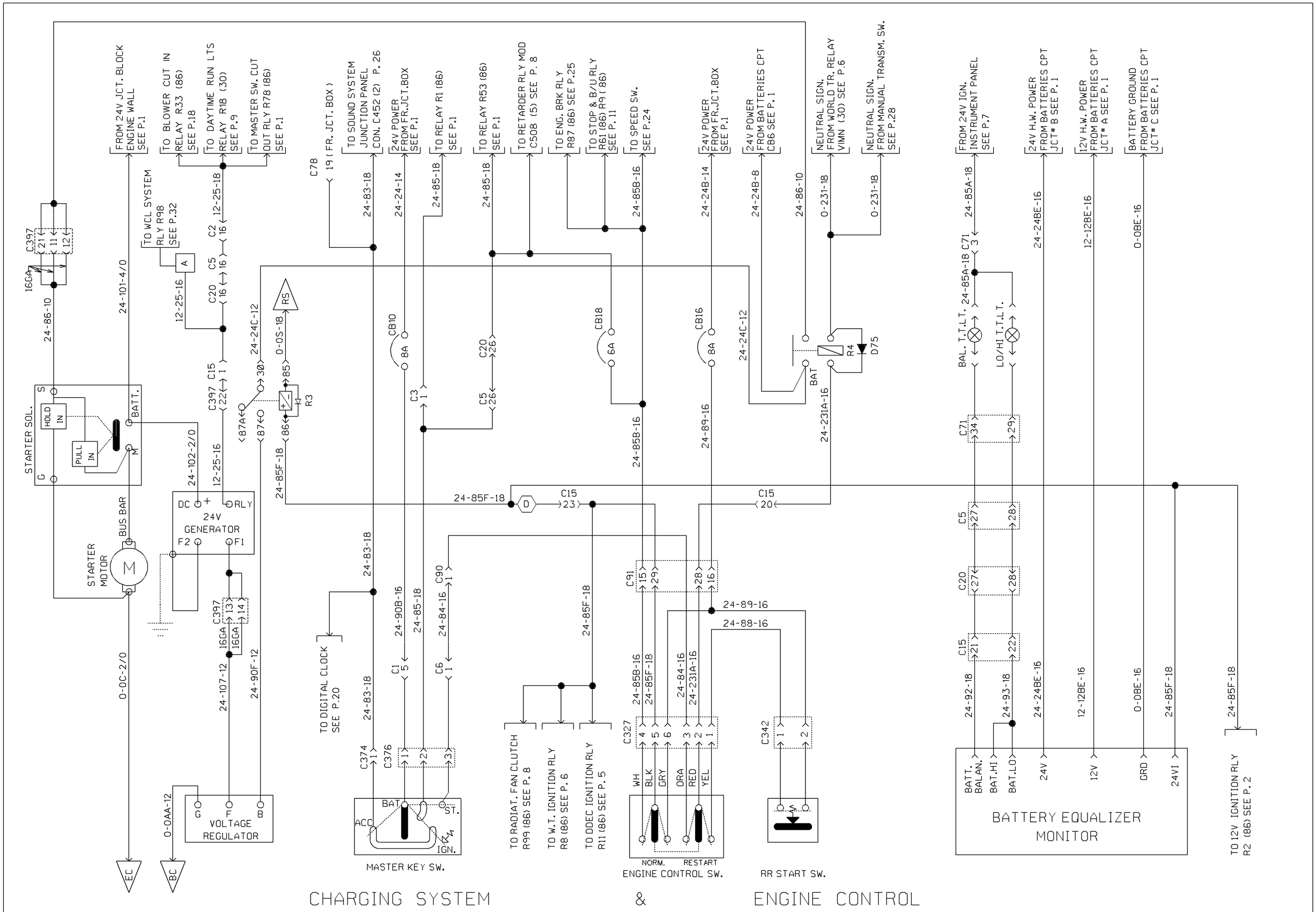

PREVOST CAR inc.	WIRING DIAGRAM	NO: D060869	P. 4	REVISION 021

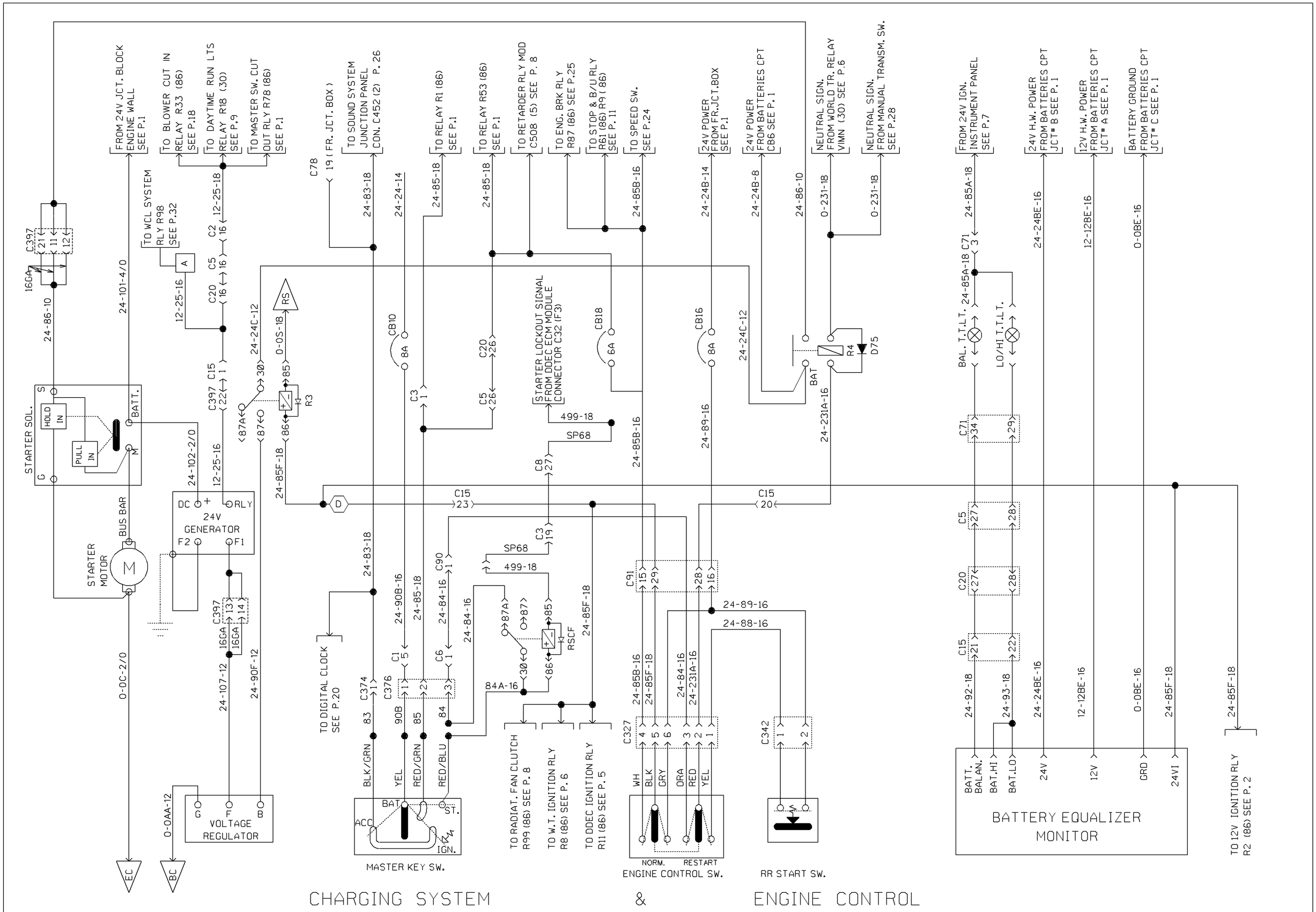

PREVOST CAR inc. | WIRING DIAGRAM | NO: D060869 | P. 4SP1 | 96/10/02

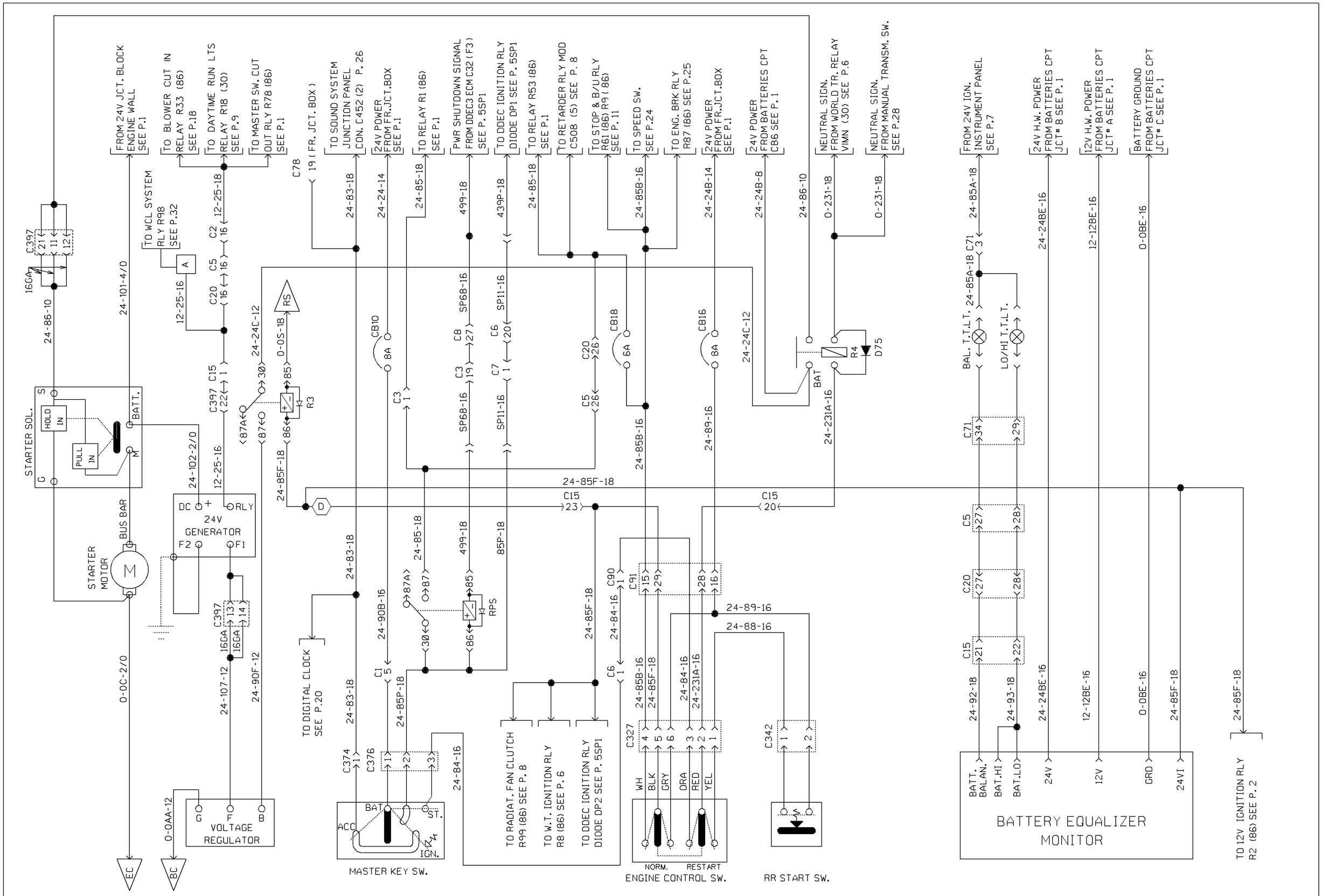

SPECIAL CHARGING SYSTEM & ENGINE CONTROL WITH POWER SHUTDOWN & IDLE TIMER

VEH. #V1732

PREVOST CAR inc.	WIRING DIAGRAM	NO: D060869	P. 4SP2	REVISION 001

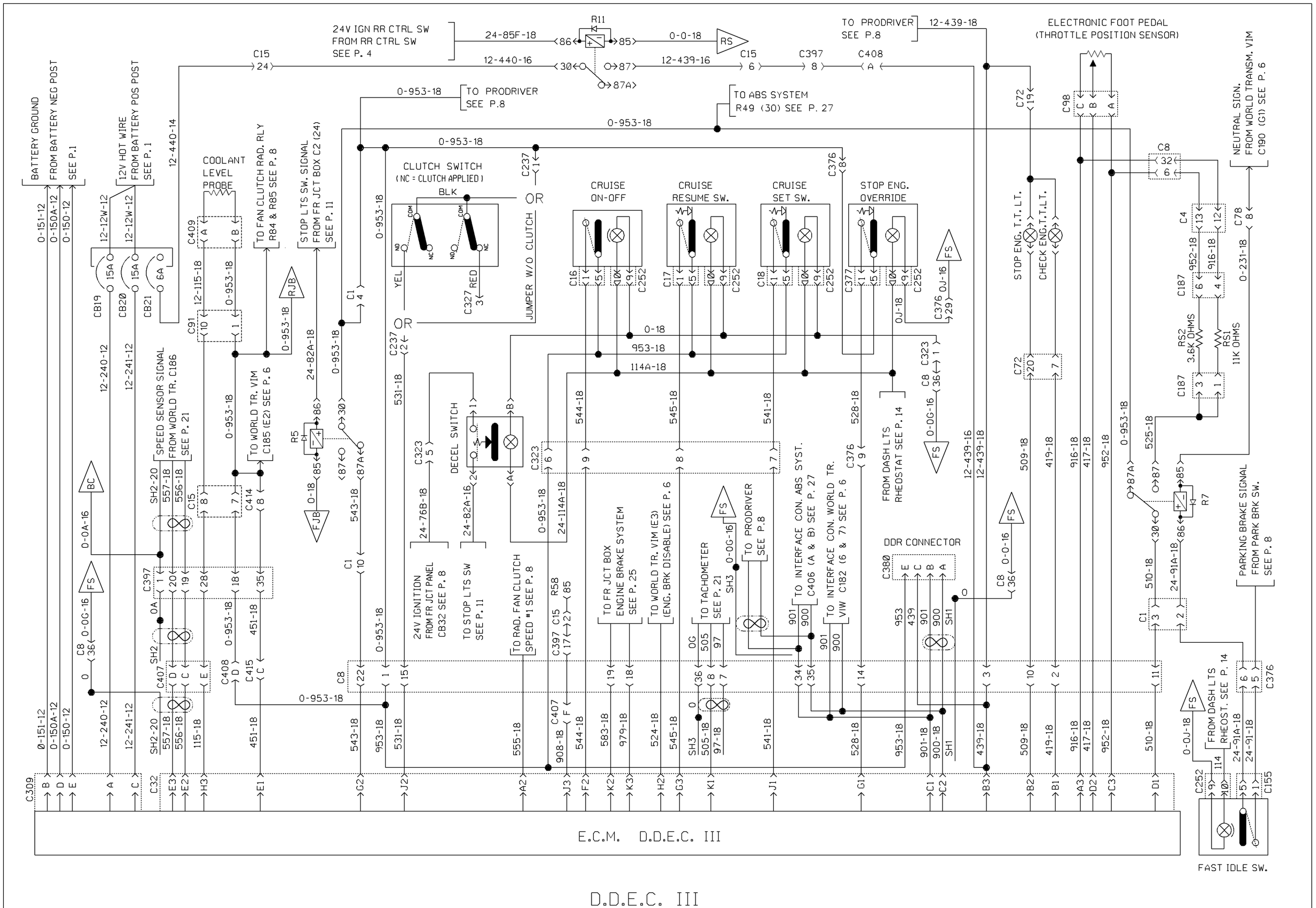

D.D.E.C. III

PREVOST CAR inc.	WIRING DIAGRAM	NO: D060869	P. 5	REVISION 000

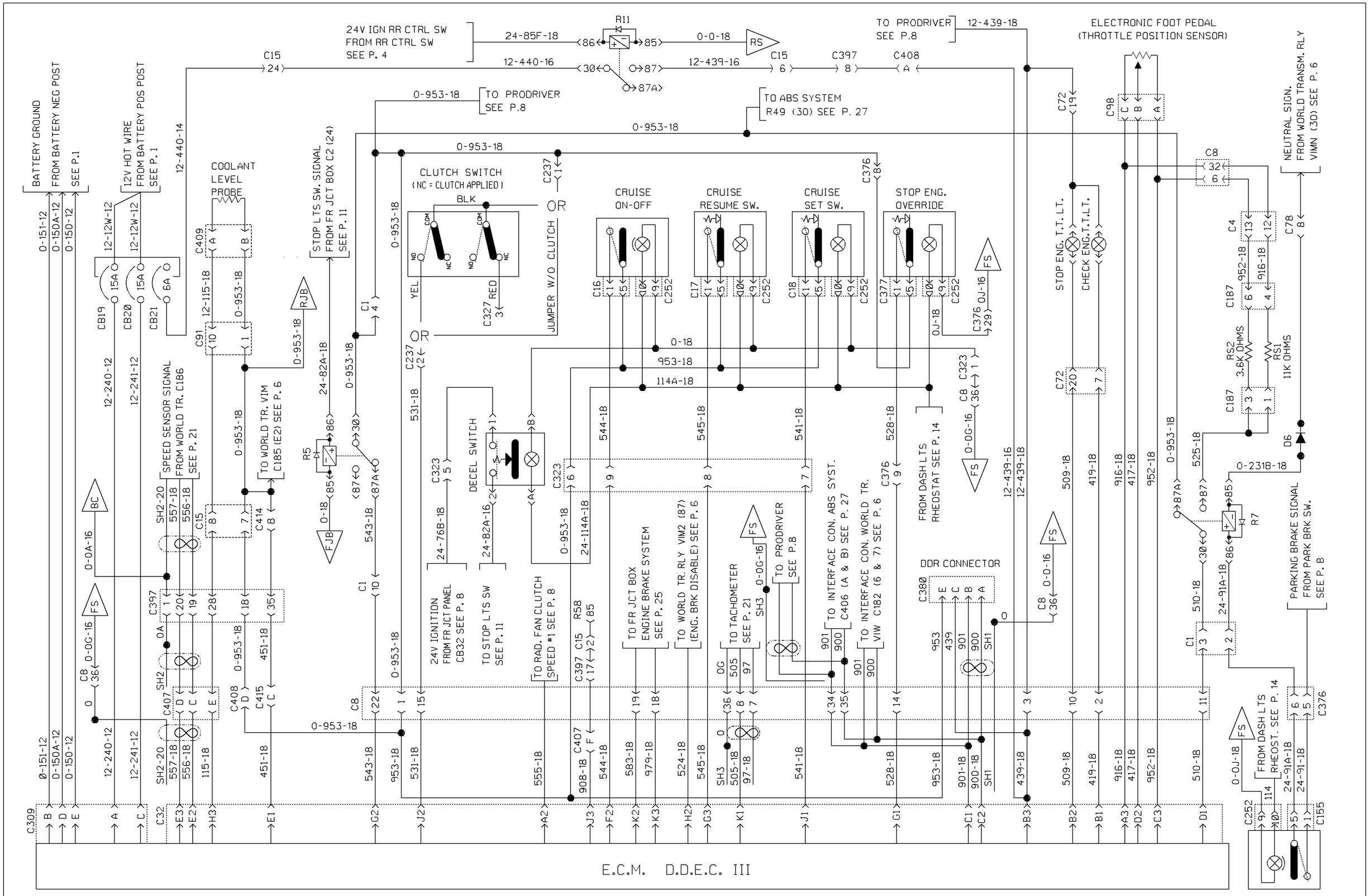

D.D.E.C. III

PREVOST CAR inc.	WIRING DIAGRAM	NO: D060869	P. 5	REVISION 023

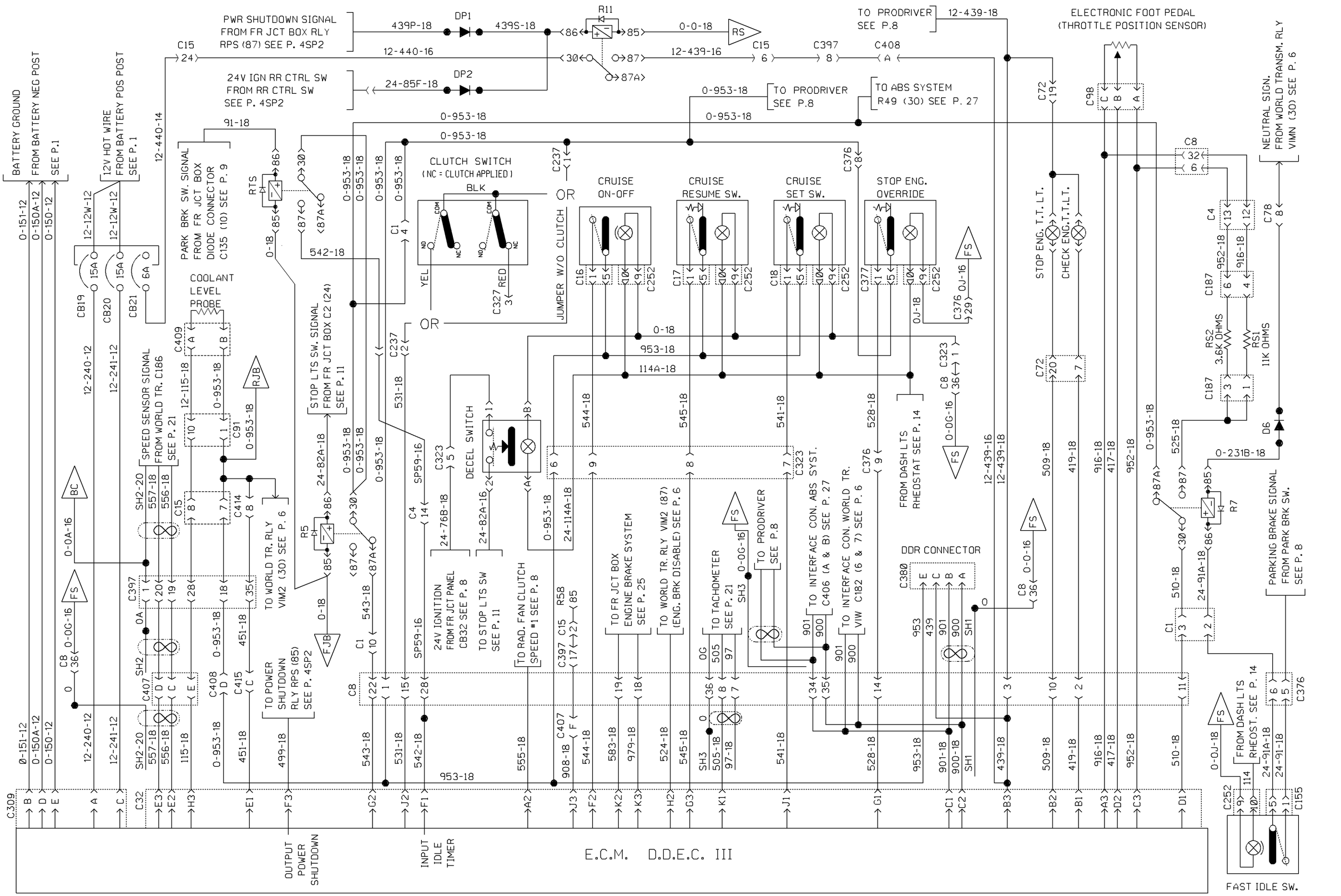

SPECIAL D.D.E.C. III WITH POWER SHUTDOWN & IDLE TIMER

PREVOST CAR inc.	WIRING DIAGRAM	NO: D060869	P. 5SP1	REVISION 000

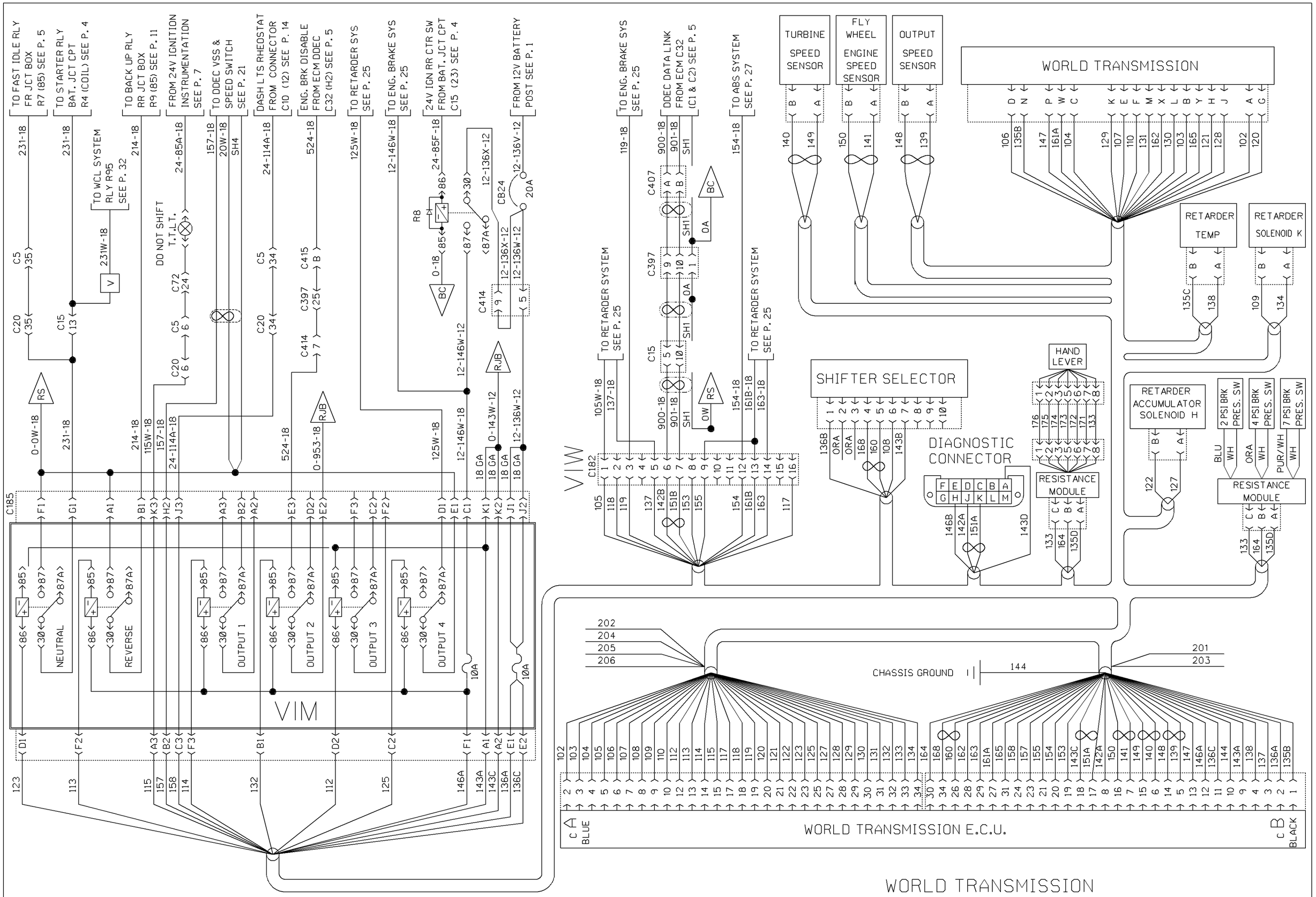

PREVOST CAR inc.	WIRING DIAGRAM	NO: D060869	P. 6	REVISION 000

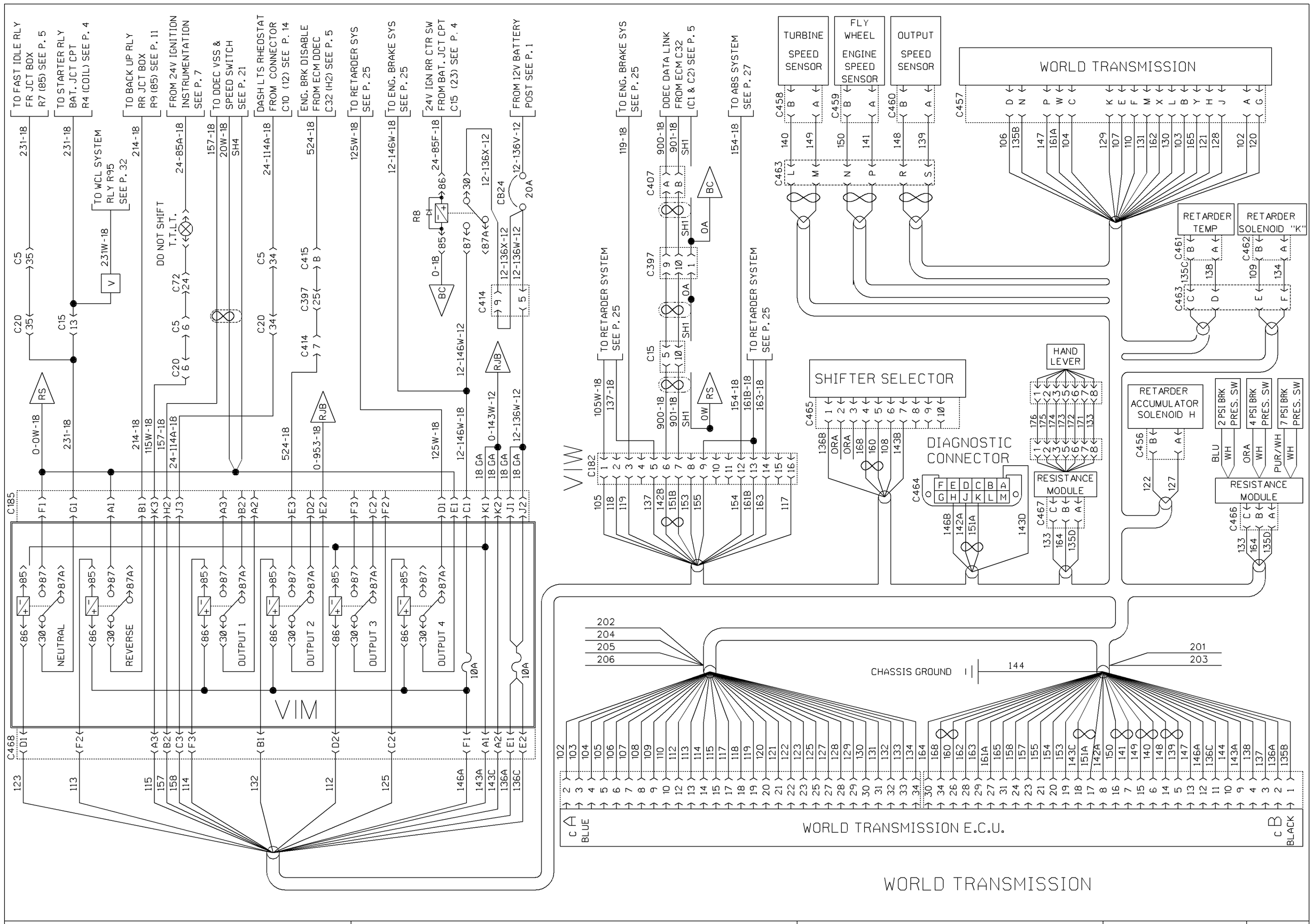

PREVOST CAR inc.	WIRING DIAGRAM	NO: D060869	P. 6	REVISION 010

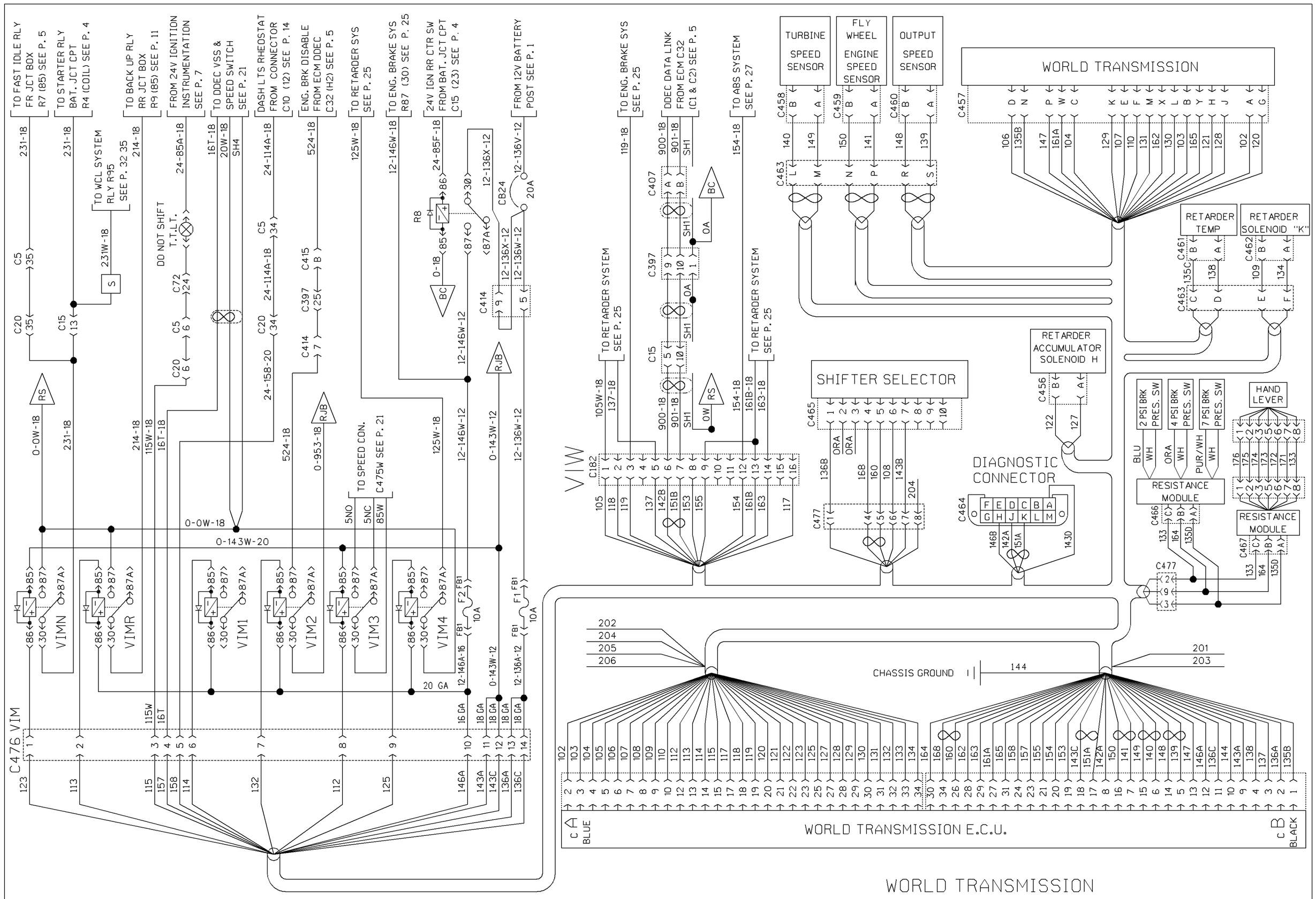
TO FAST IDLE RLY FR JCT BOX R7 (85) SEE P. 5
TO STARTER RLY BAT. JCT CPT R4 (COIL) SEE P. 4
TO BACK UP RLY RR JCT BOX R9 (85) SEE P. 11
FROM 24V IGNITION INSTRUMENTATION SEE P. 7
TO DDEC VSS & SPEED SWITCH SEE P. 21
DASH LTS RHEOSTAT FROM CONNECTOR C10 (12) SEE P. 14
ENG. BRK DISABLE FROM ECM DDEC C32 (H2) SEE P. 5
TO RETARDER SYS SEE P. 25
TO ENG. BRAKE SYS R87 (30) SEE P. 25
24V IGN RR CTR SW FROM BAT. JCT CPT C15 (23) SEE P. 4
FROM 12V BATTERY POST SEE P. 1
TO WCL SYSTEM RLY R95 SEE P. 32 35
DO NOT SHIFT
T.T.LT.
TO SPEED CON. C475W SEE P. 21
VIMN
VIMR
VIM1
VIM2
VIM3
VIM4
C476 VIM
VIW
TO ENG. BRAKE SYS SEE P. 25
TO RETARDER SYSTEM SEE P. 25
DDEC DATA LINK FROM ECM C32 (C1 & C2) SEE P. 5
TO ABS SYSTEM SEE P. 27
TURBINE SPEED SENSOR
FLY WHEEL ENGINE SPEED SENSOR
OUTPUT SPEED SENSOR
WORLD TRANSMISSION
RETARDER TEMP
RETARDER SOLENOID "K"
RETARDER ACCUMULATOR SOLENOID H
SHIFTER SELECTOR
DIAGNOSTIC CONNECTOR
2 PSI BRK PRES. SW
4 PSI BRK PRES. SW
7 PSI BRK PRES. SW
HAND LEVER
RESISTANCE MODULE
RESISTANCE MODULE
CHASSIS GROUND
WORLD TRANSMISSION E.C.U.
C A BLUE
C B BLACK
WORLD TRANSMISSION

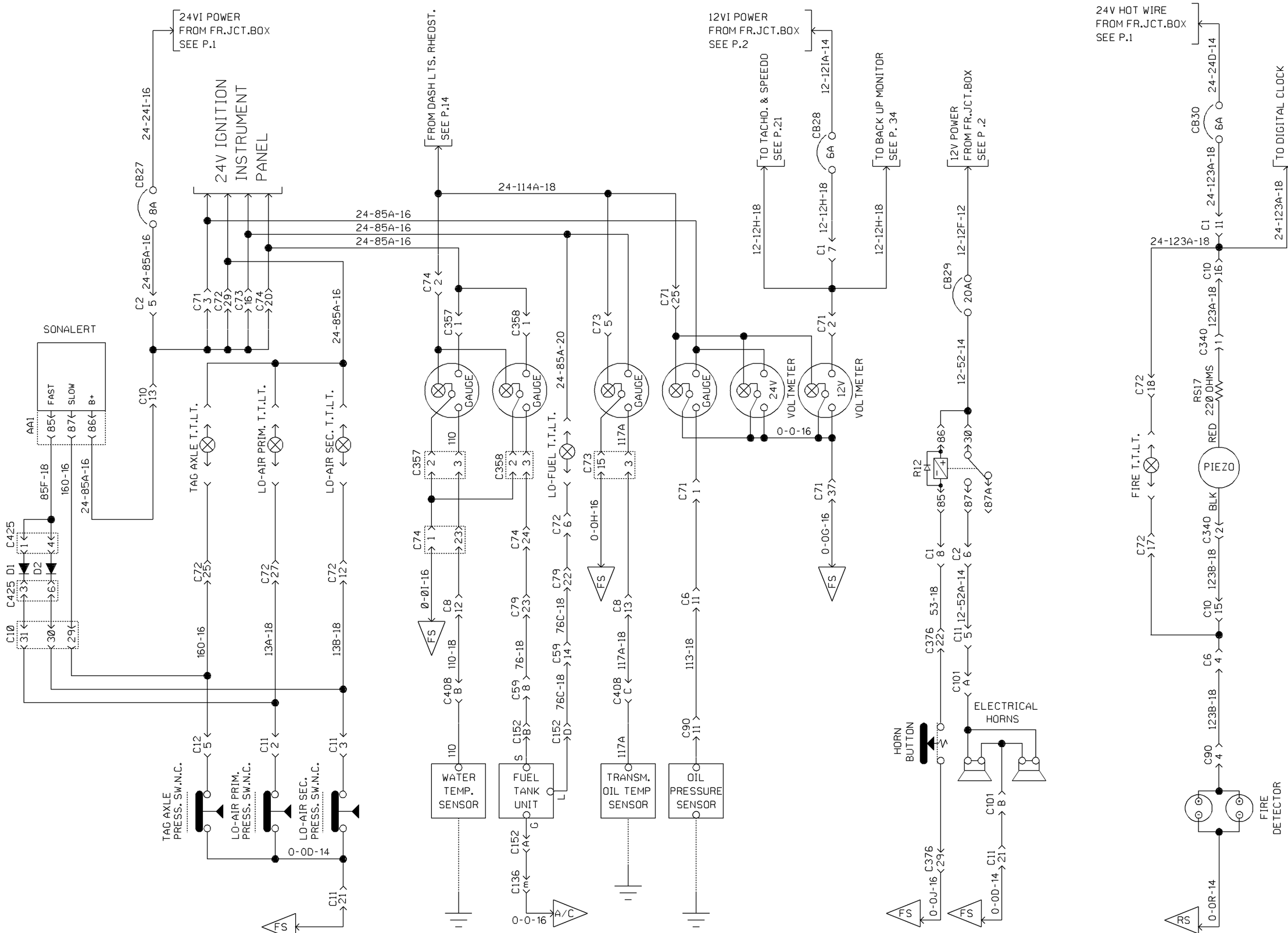

ALARM AND SIGNAL

PREVOST CAR inc.	WIRING DIAGRAM	NO: D060869	P. 7	REVISION 004

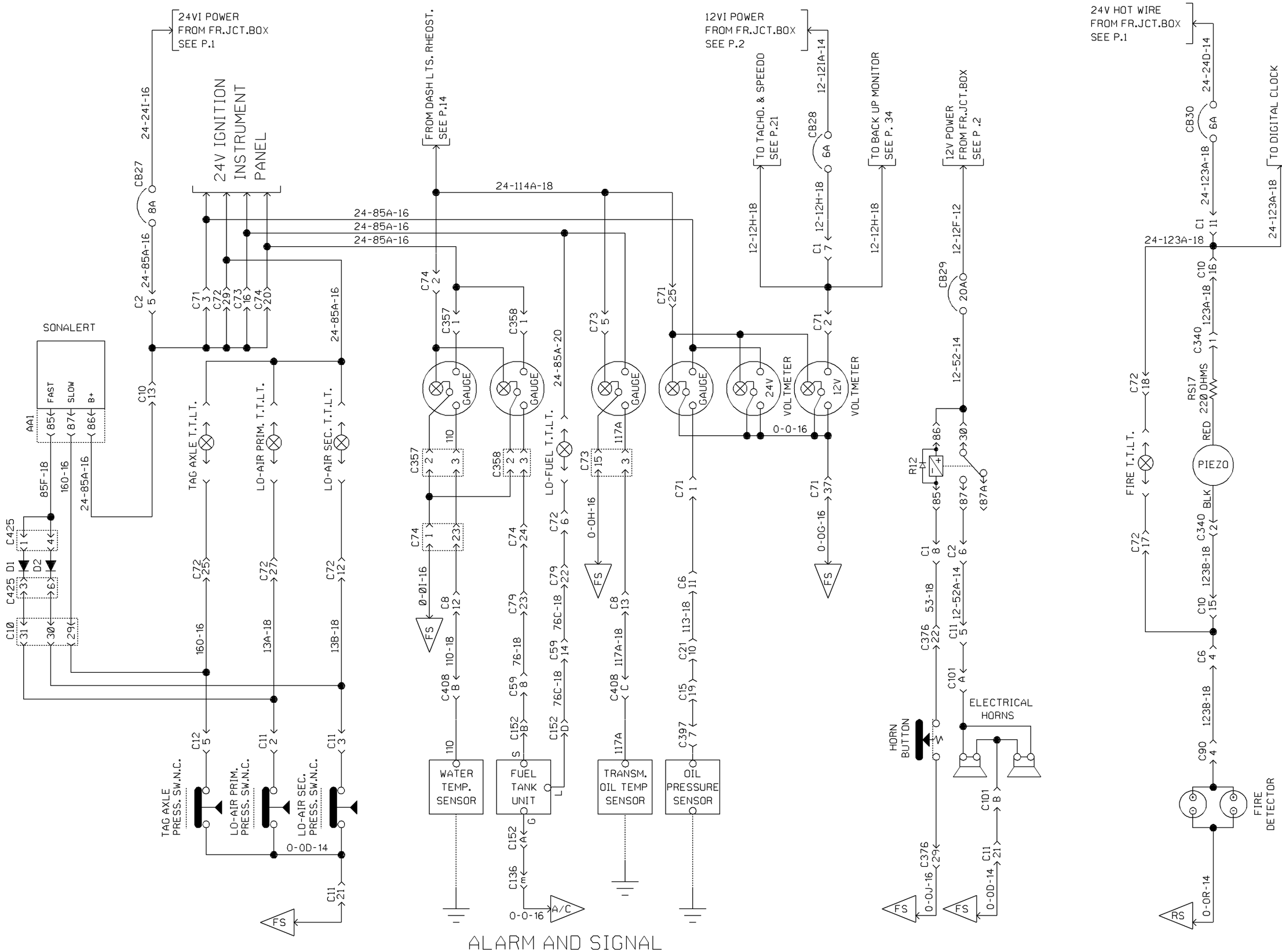

ALARM AND SIGNAL

PREVOST CAR inc.	WIRING DIAGRAM	NO: D060869	P. 7	REVISION 021

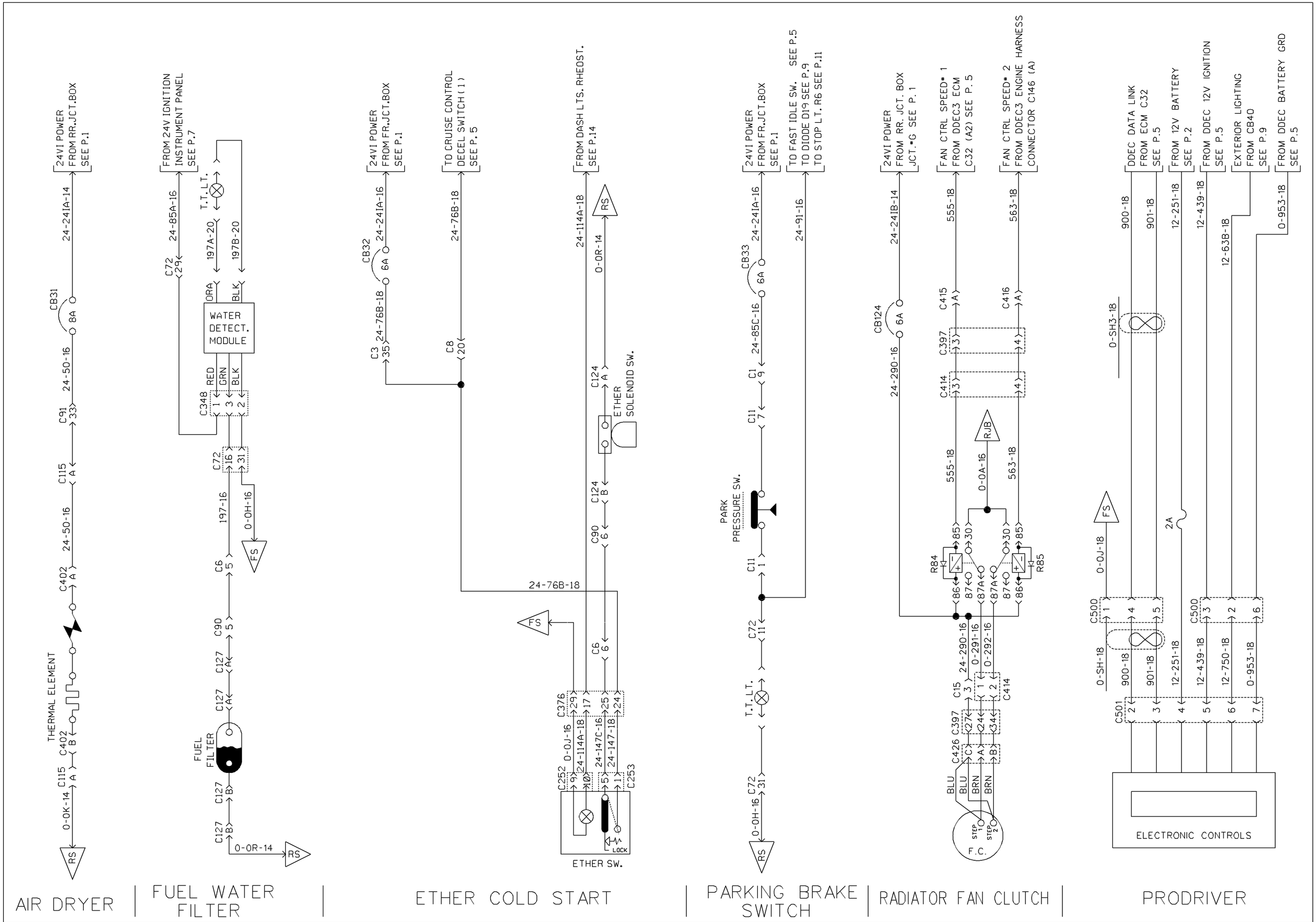

PREVOST CAR inc.	WIRING DIAGRAM	NO: D060869	P. 8 PRIOR	REVISION 000

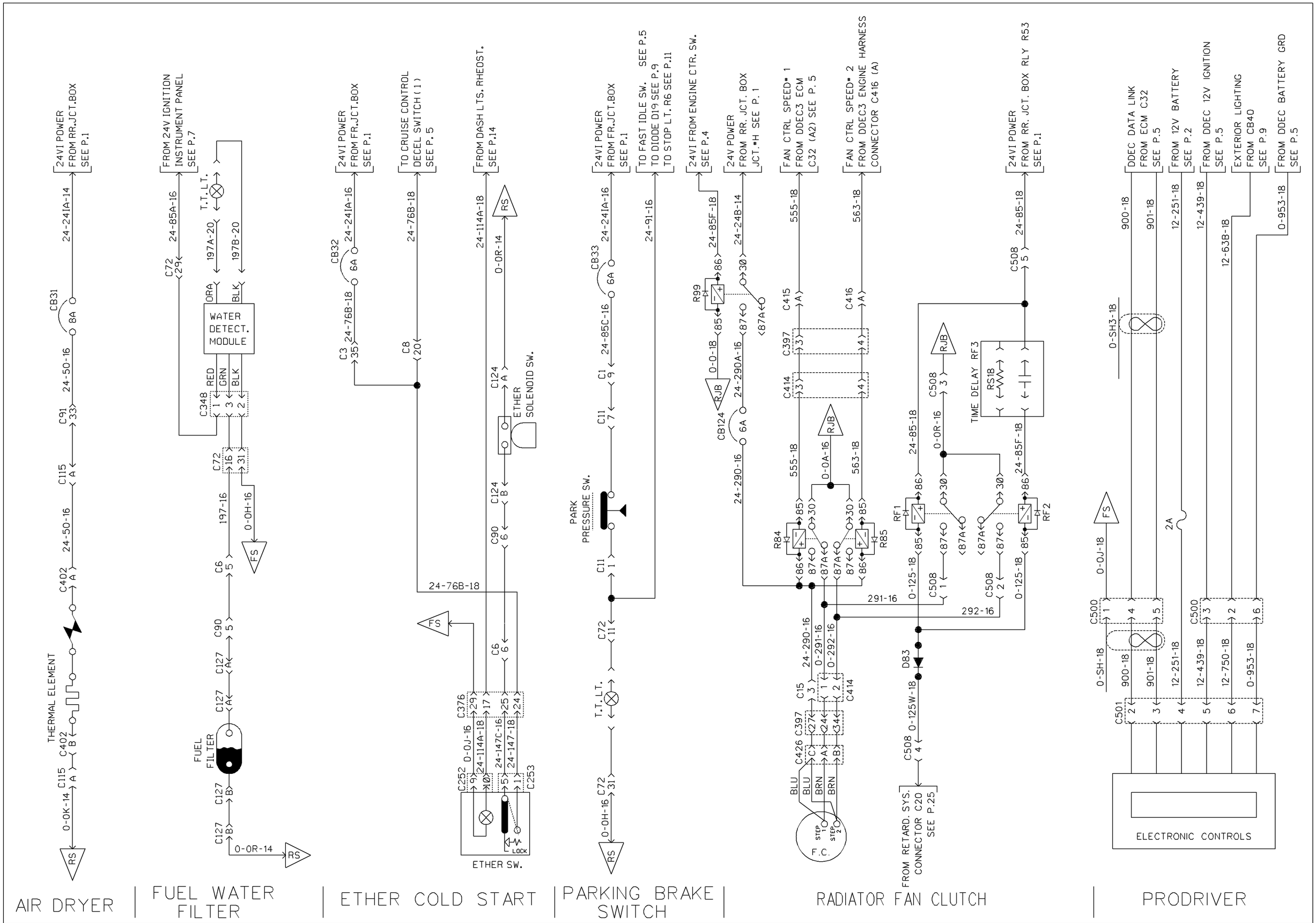

PREVOST CAR inc.	WIRING DIAGRAM	NO: D060869	P. 8	REVISION 008

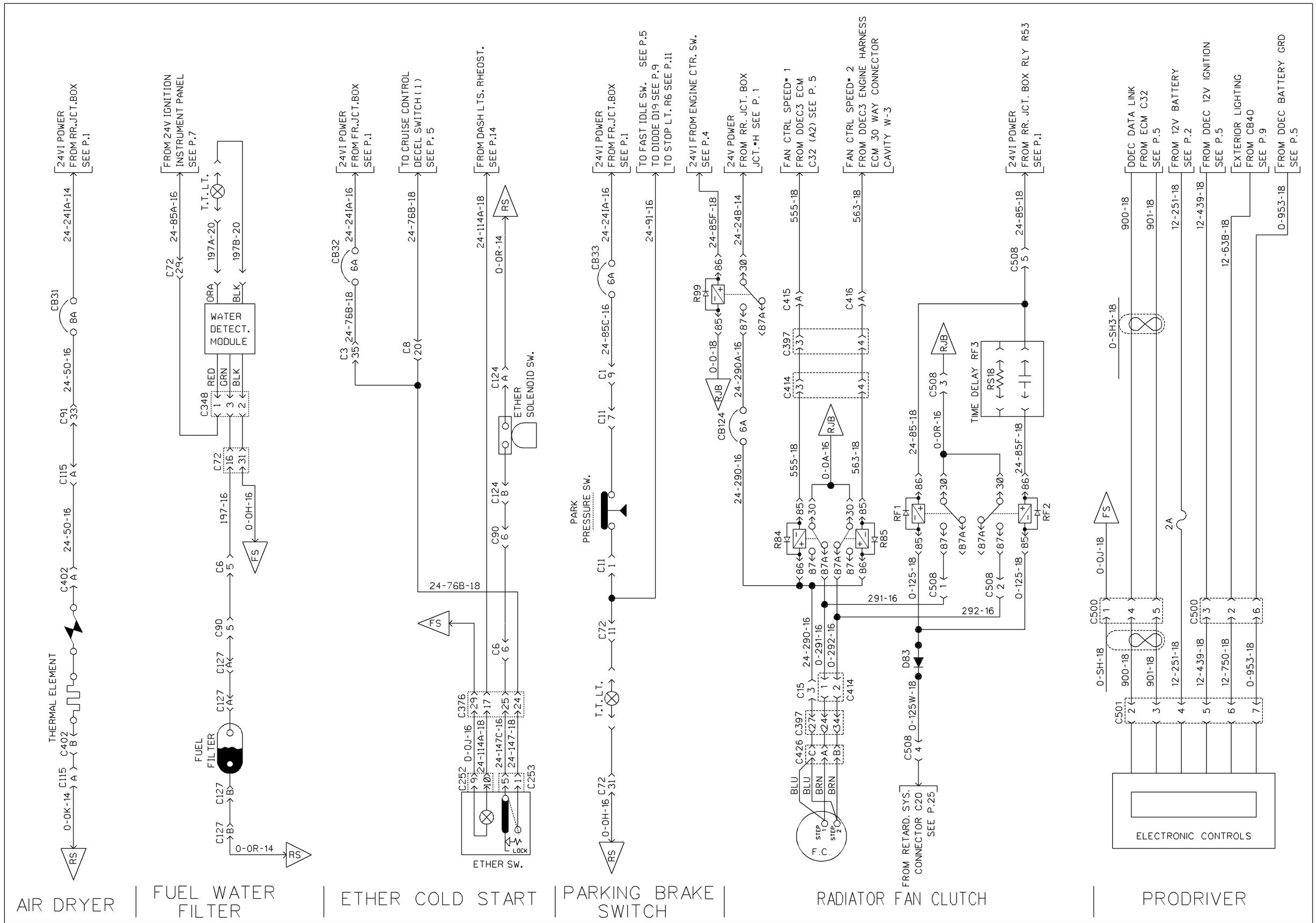

PREVOST CAR inc.	WIRING DIAGRAM	NO: D060869	P. 8	REVISION 021

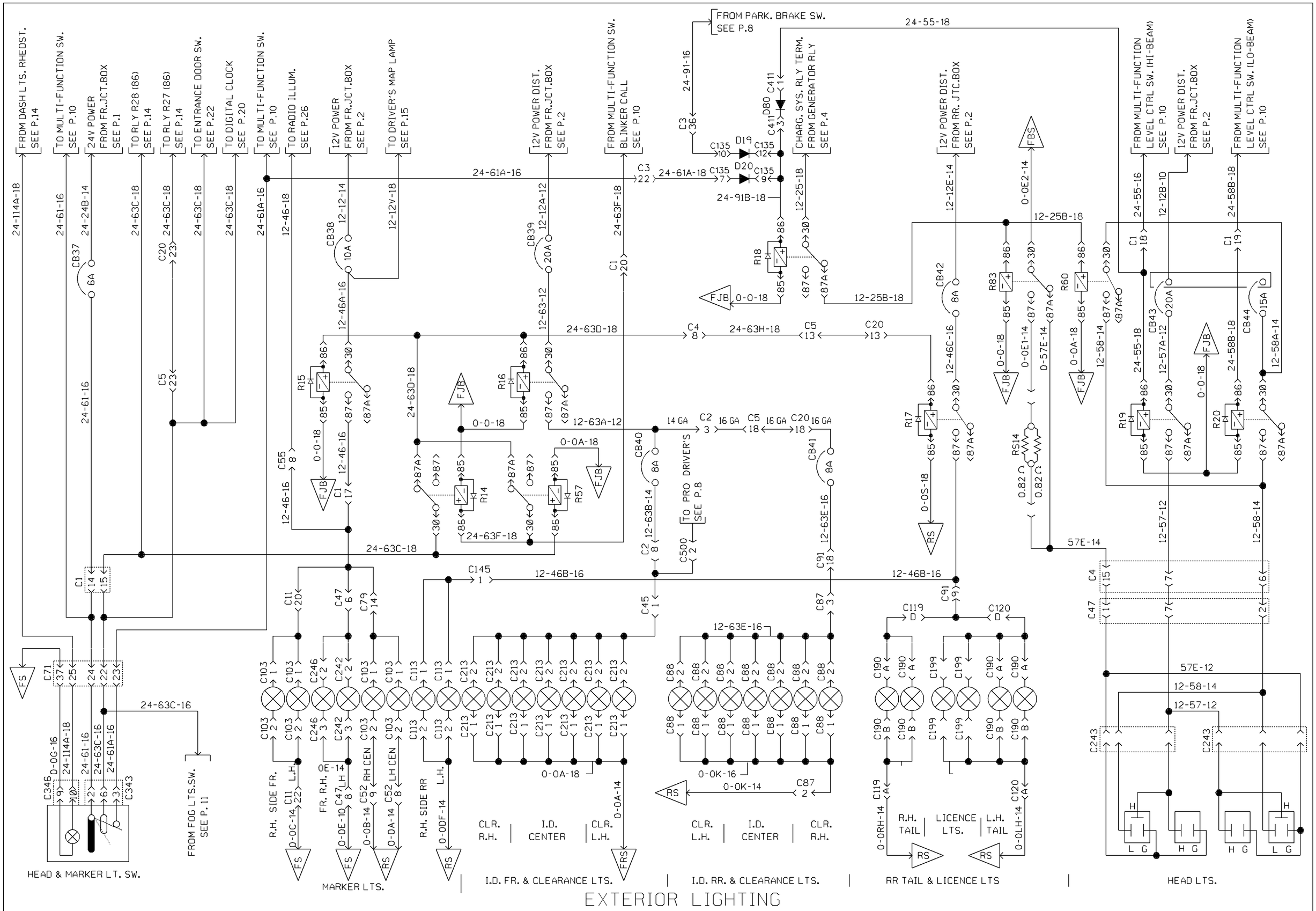

PREVOST CAR inc.	WIRING DIAGRAM	NO: D060869	P. 9	REVISION 004

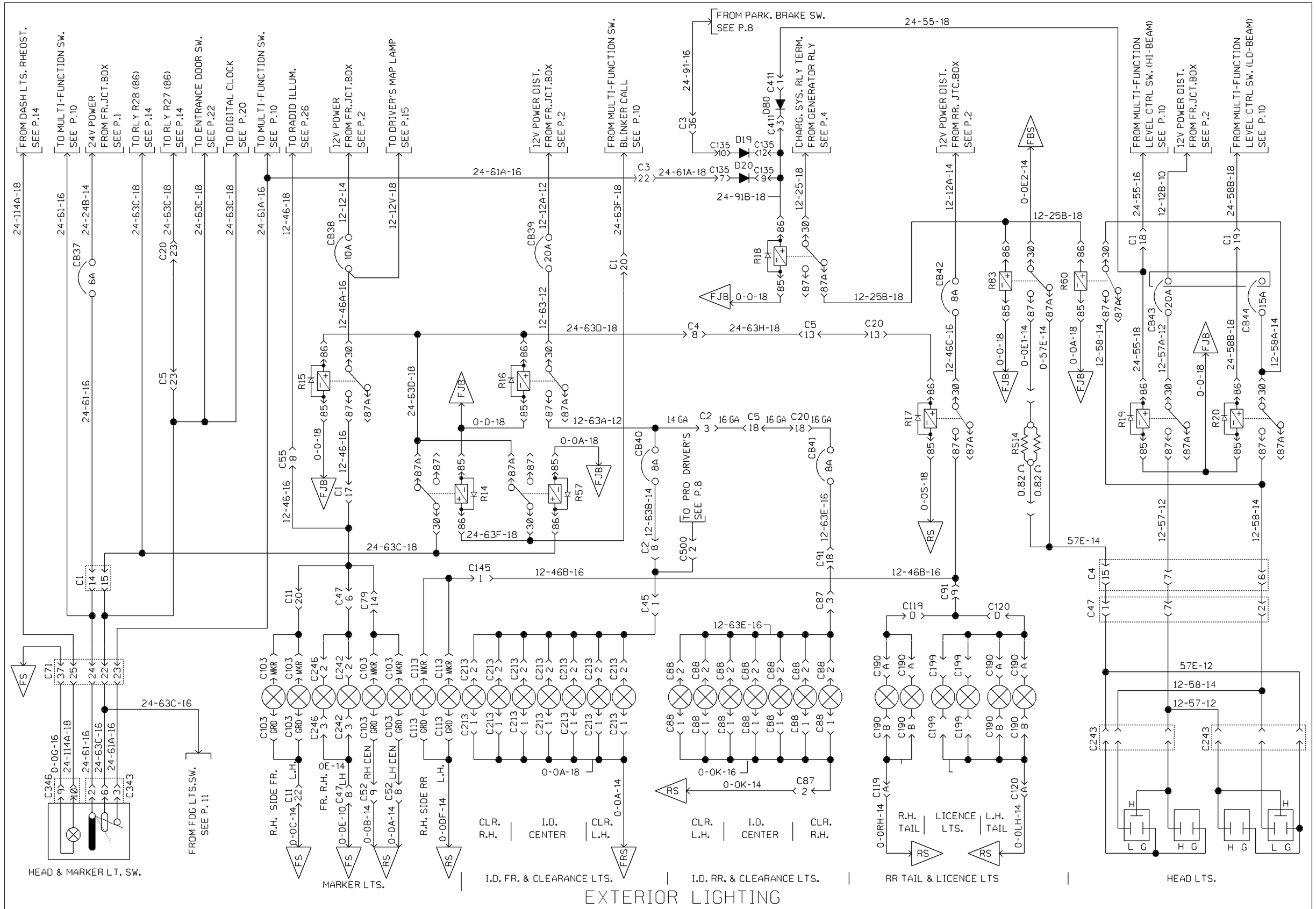

PREVOST CAR inc.	WIRING DIAGRAM	NO: D060869	P. 9	REVISION 021

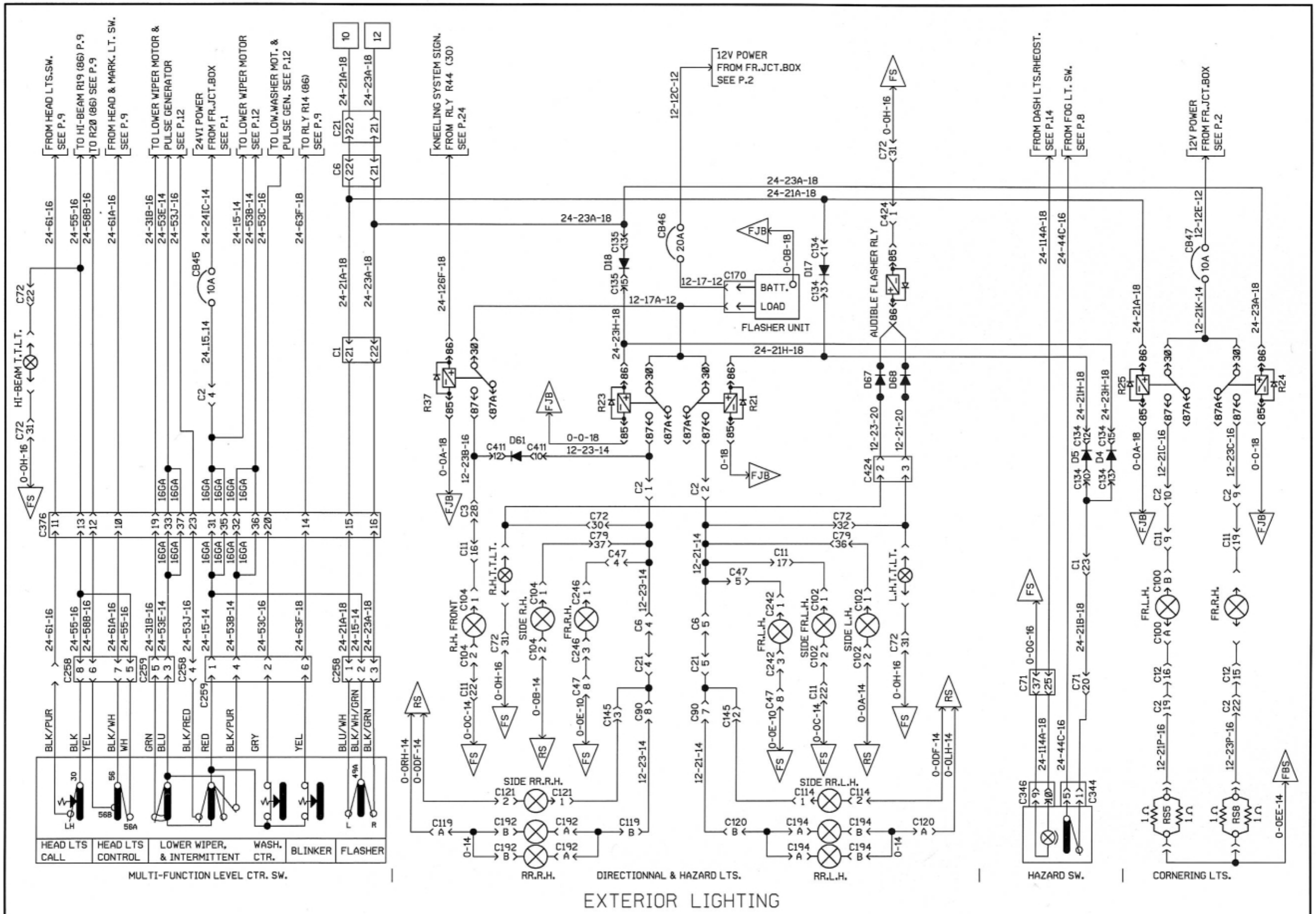

EXTERIOR LIGHTING

PREVOST CAR inc.	WIRING DIAGRAM	NO: D060869	P. 10	REVISION 000

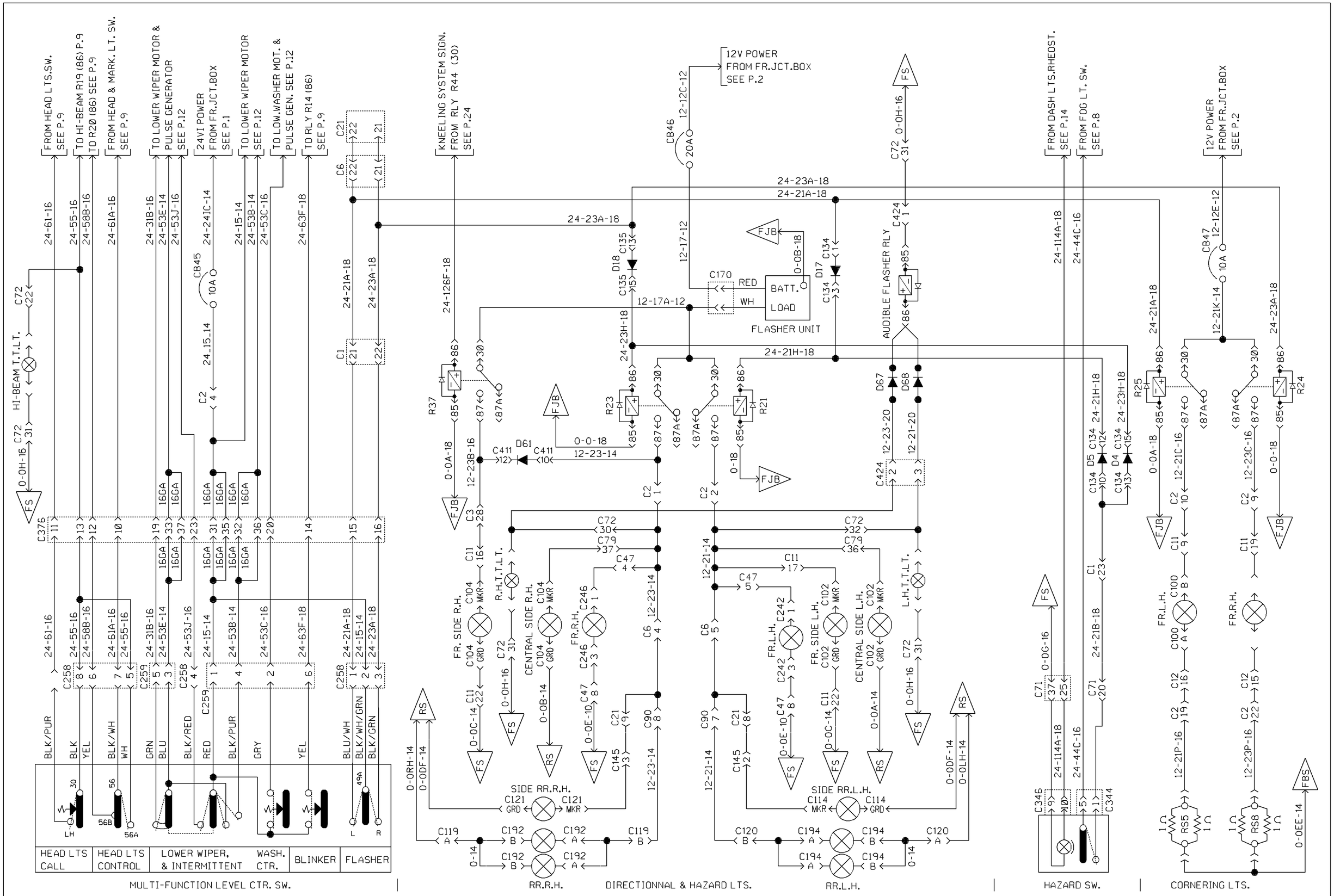

EXTERIOR LIGHTING

PREVOST CAR inc.	WIRING DIAGRAM	NO: D060869	P. 10	REVISION 023

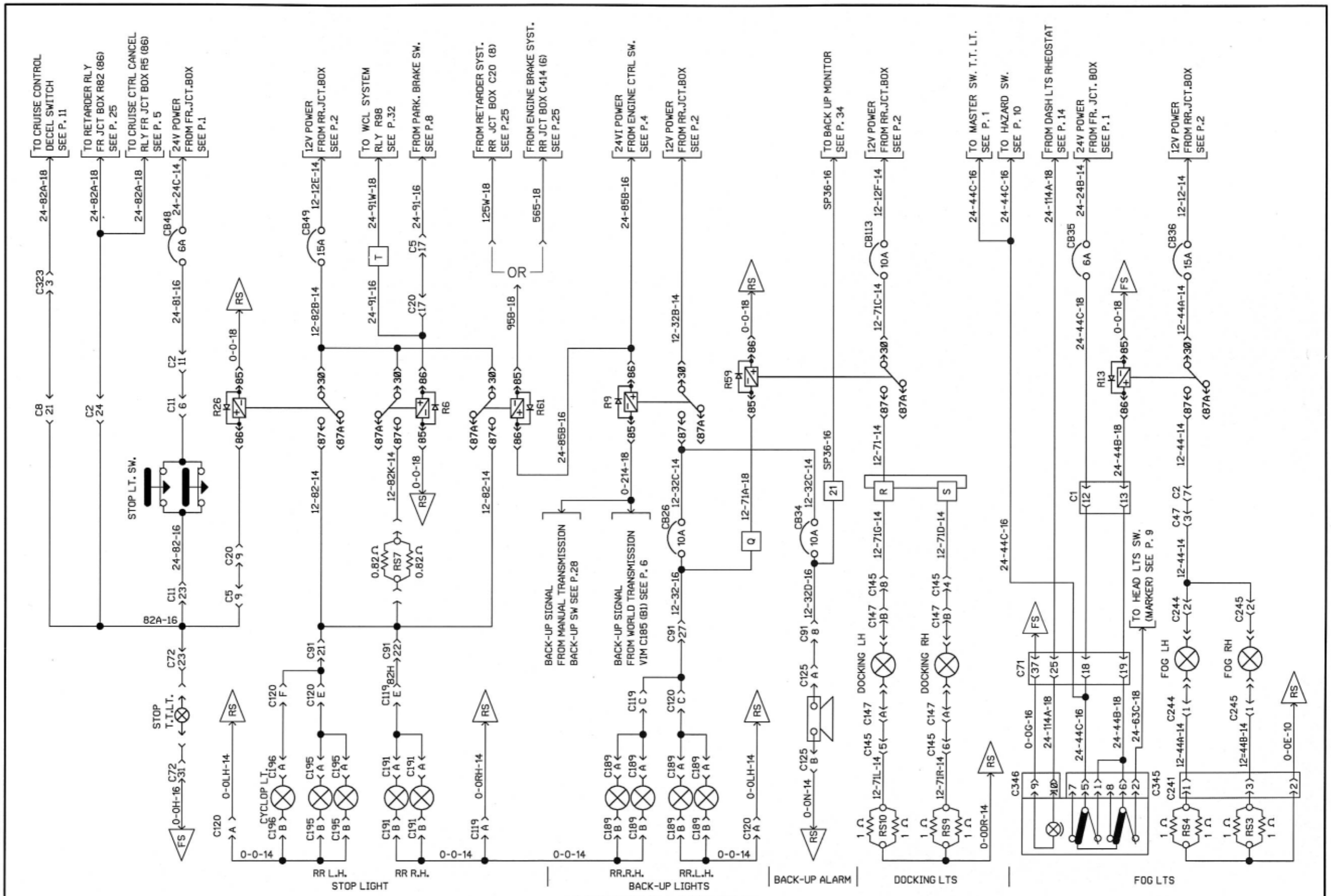

EXTERIOR LIGHTING

PREVOST CAR inc.	WIRING DIAGRAM	NO: D060869	P. 11	REVISION 000

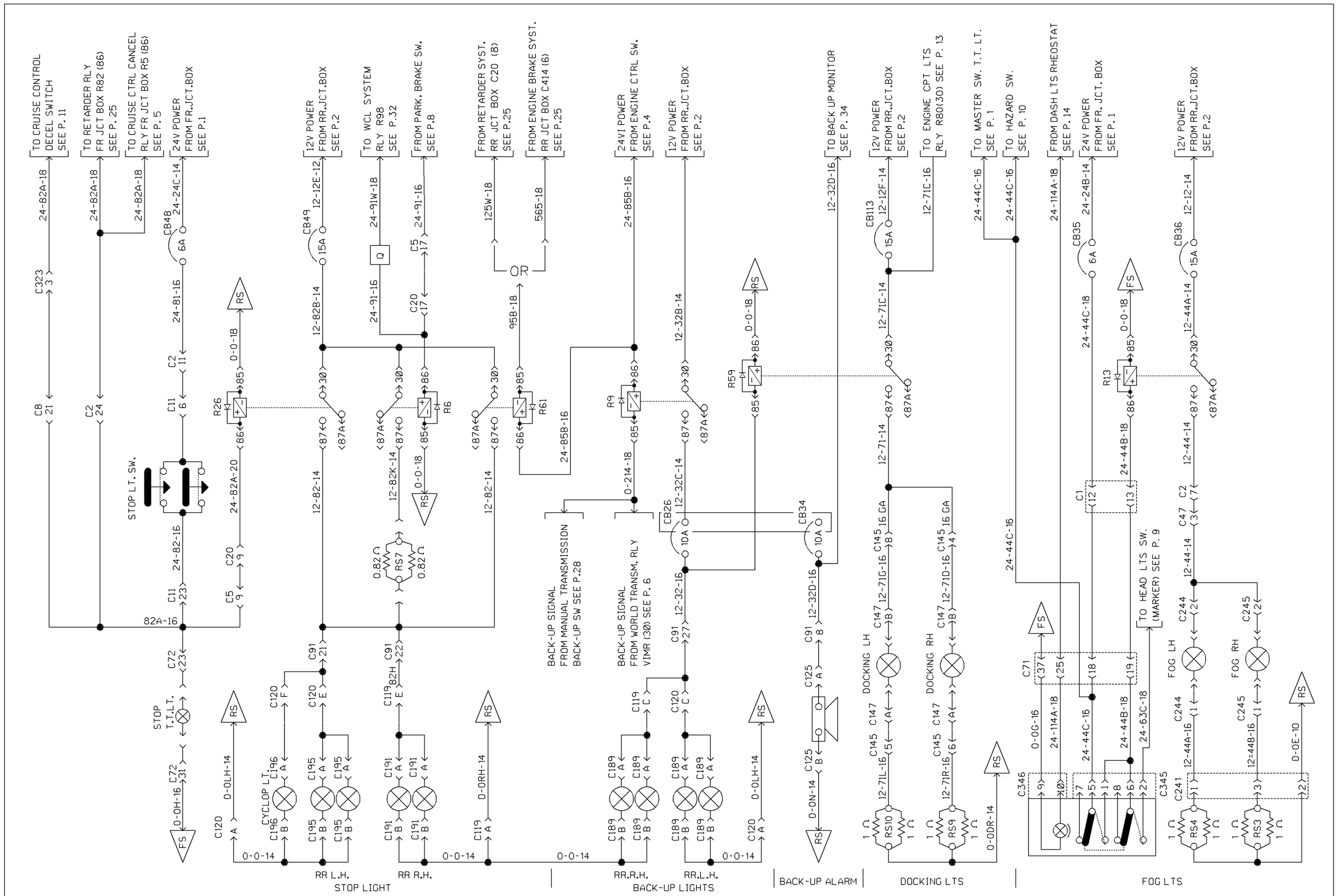

EXTERIOR LIGHTING

PREVOST CAR inc.	WIRING DIAGRAM	NO: D060869	P. 11	REVISION 021

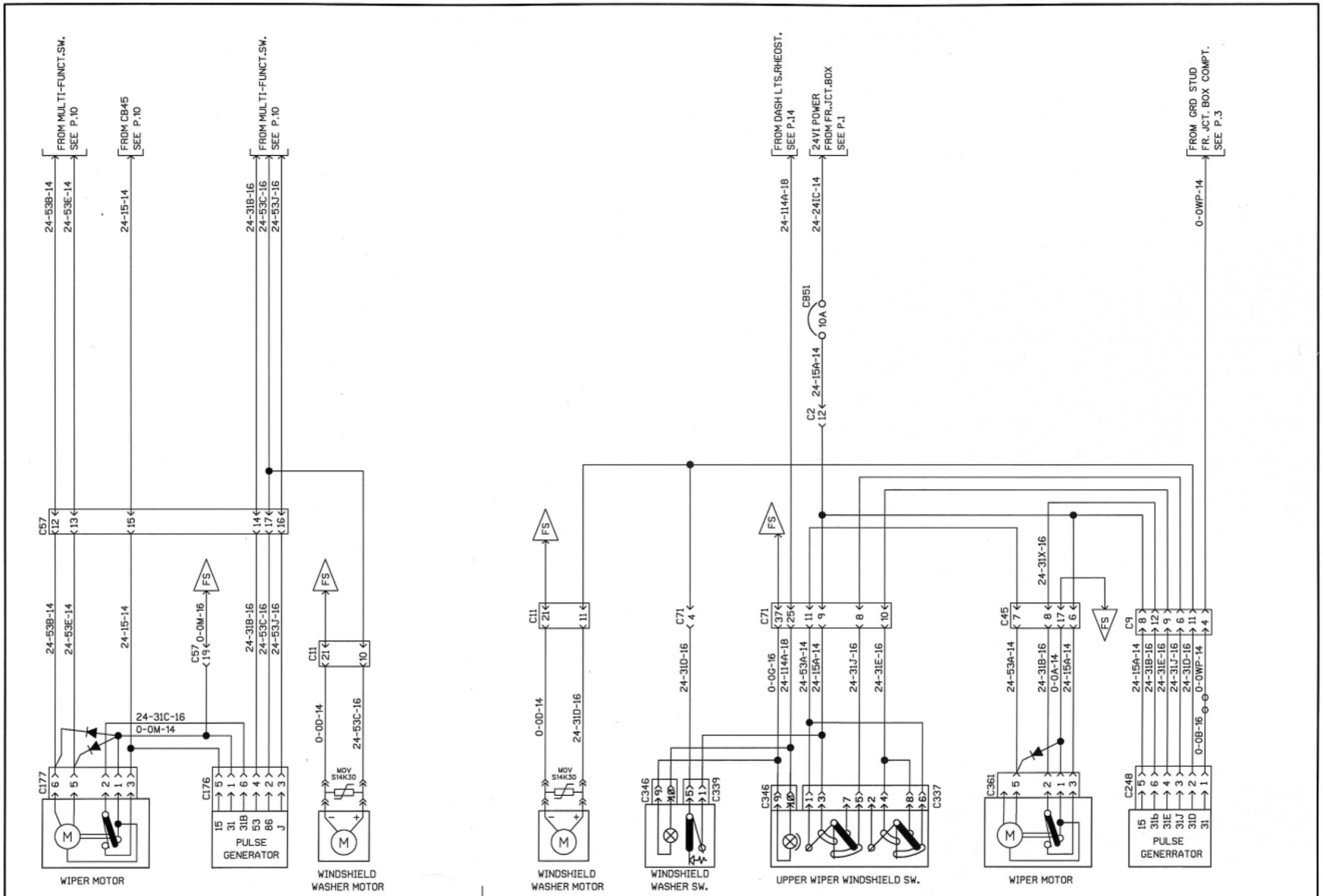

PREVOST CAR inc.	WIRING DIAGRAM	NO: D060869	P. 12	REVISION 000

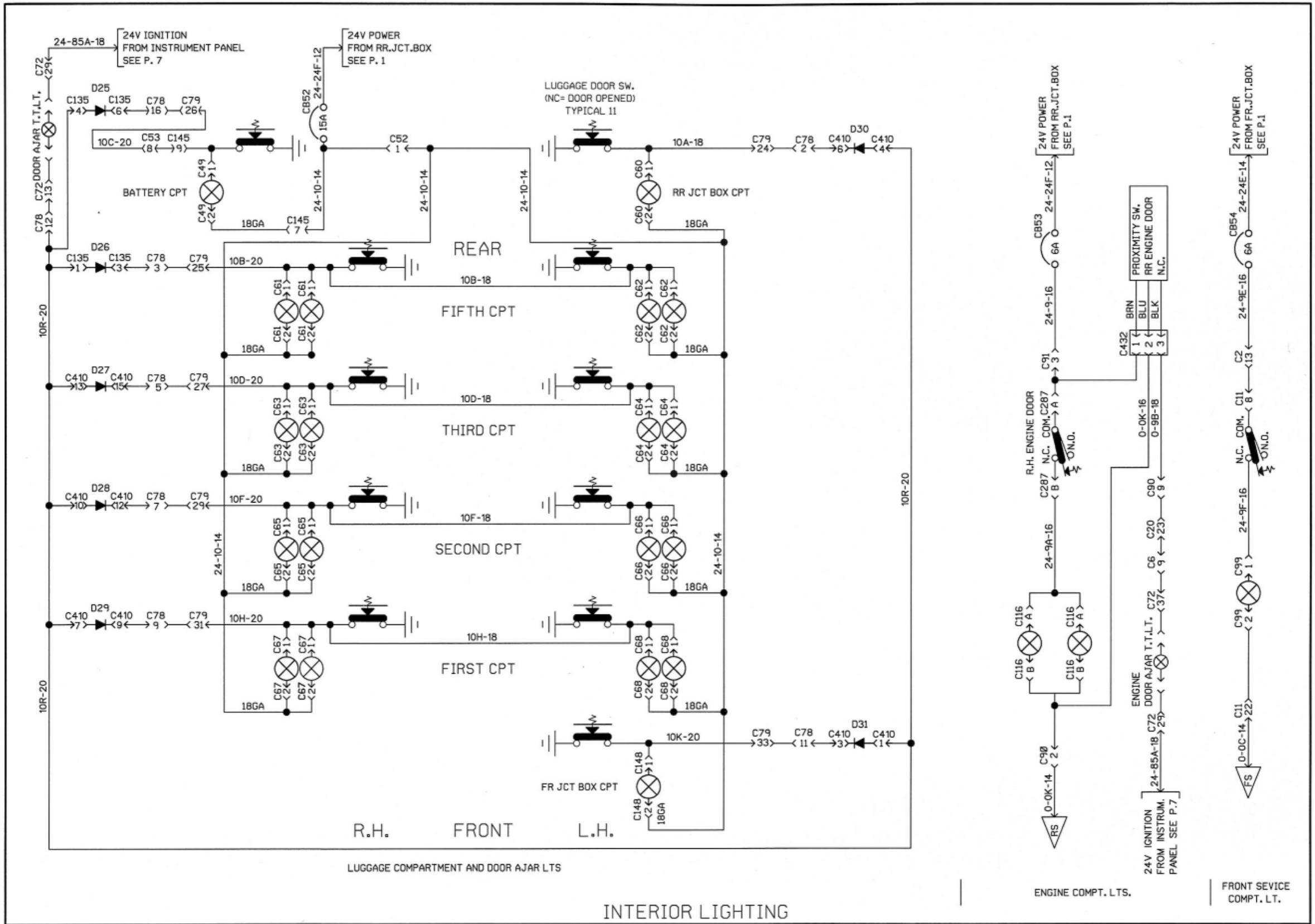

INTERIOR LIGHTING

PREVOST CAR inc.	WIRING DIAGRAM	NO: D060869	P. 13	REVISION 000

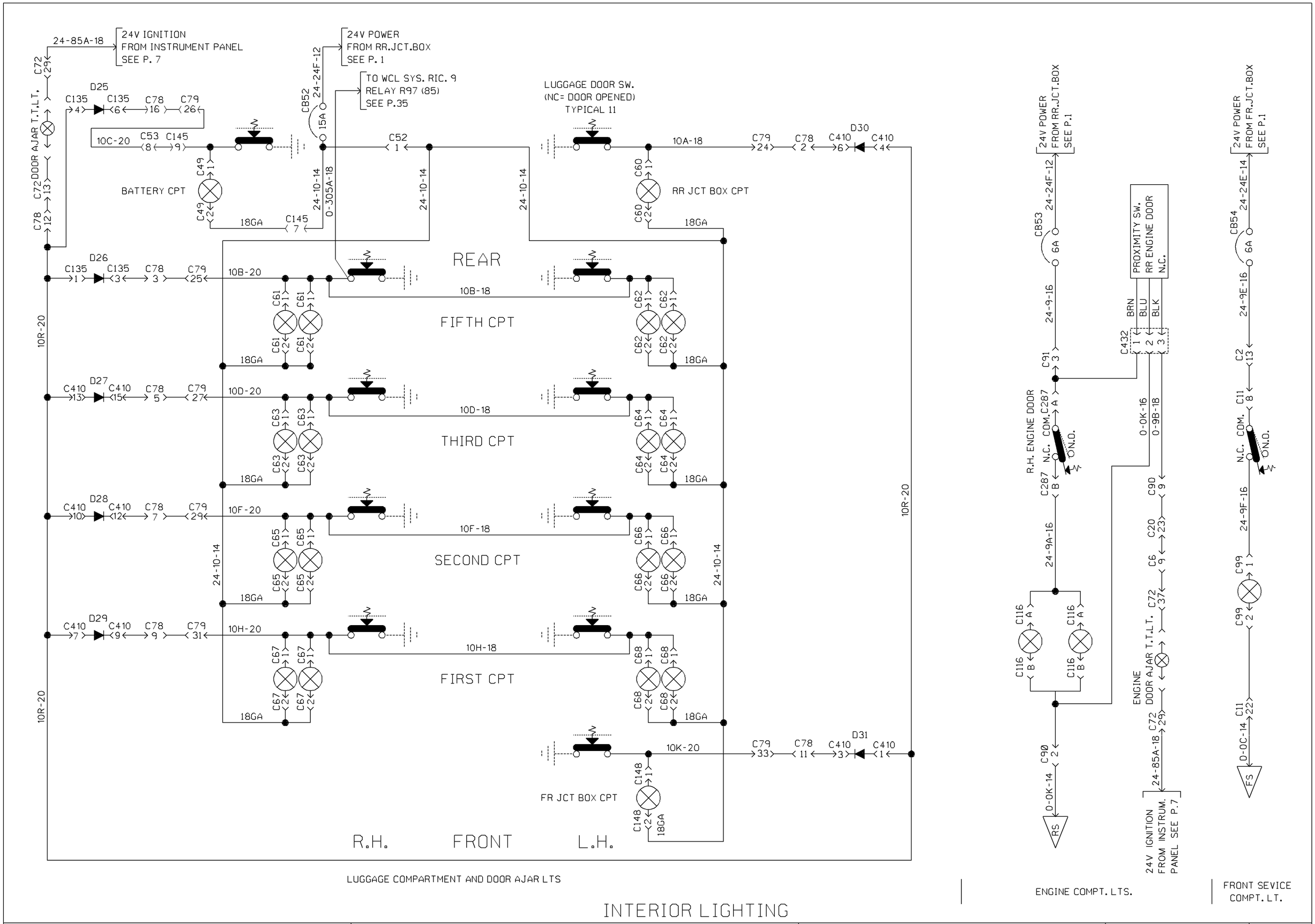

INTERIOR LIGHTING

PREVOST CAR inc.	WIRING DIAGRAM	NO: D060869	P. 13	REVISION 013

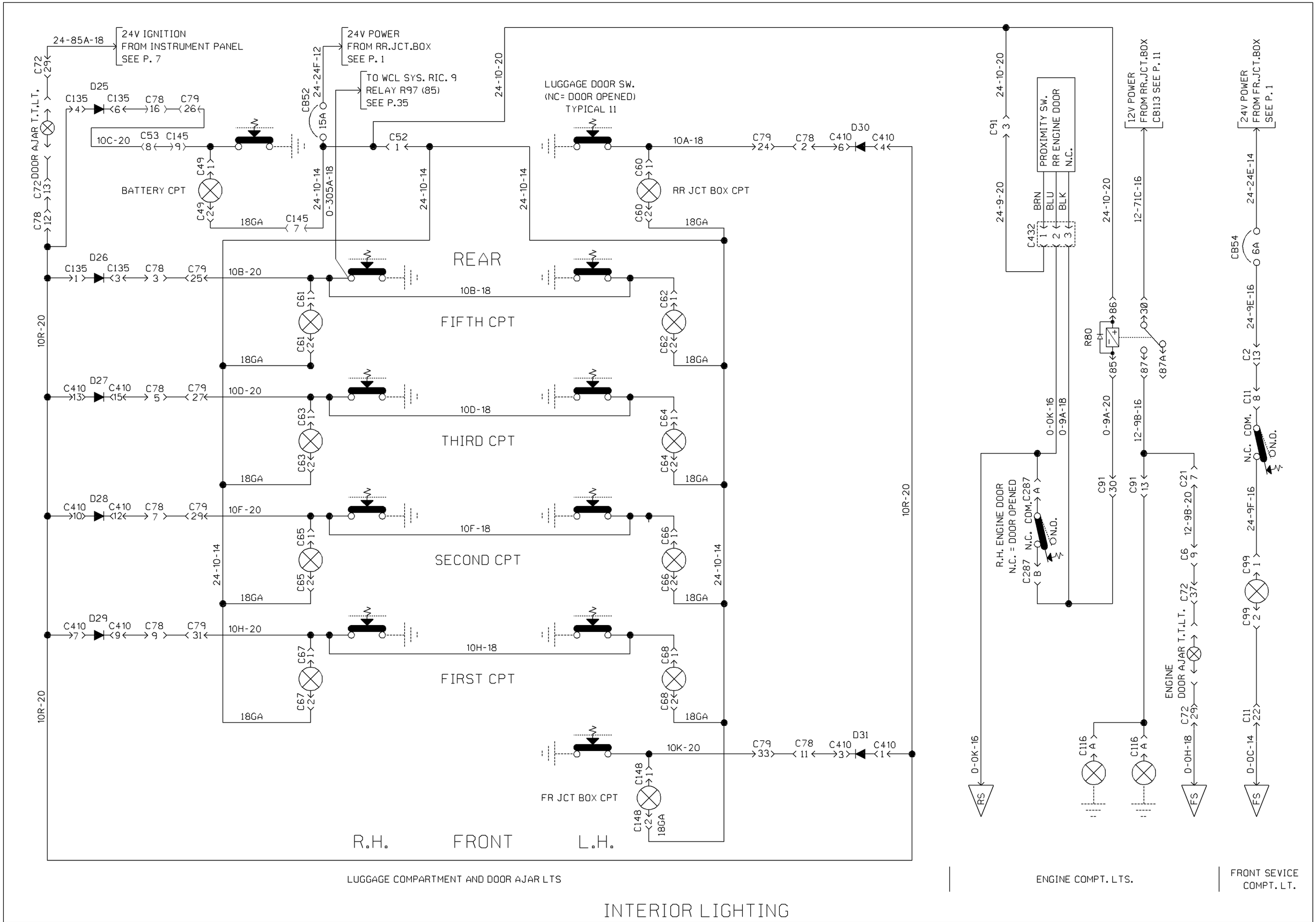

INTERIOR LIGHTING

PREVOST CAR inc.	WIRING DIAGRAM	NO: D060869	P. 13	REVISION 021

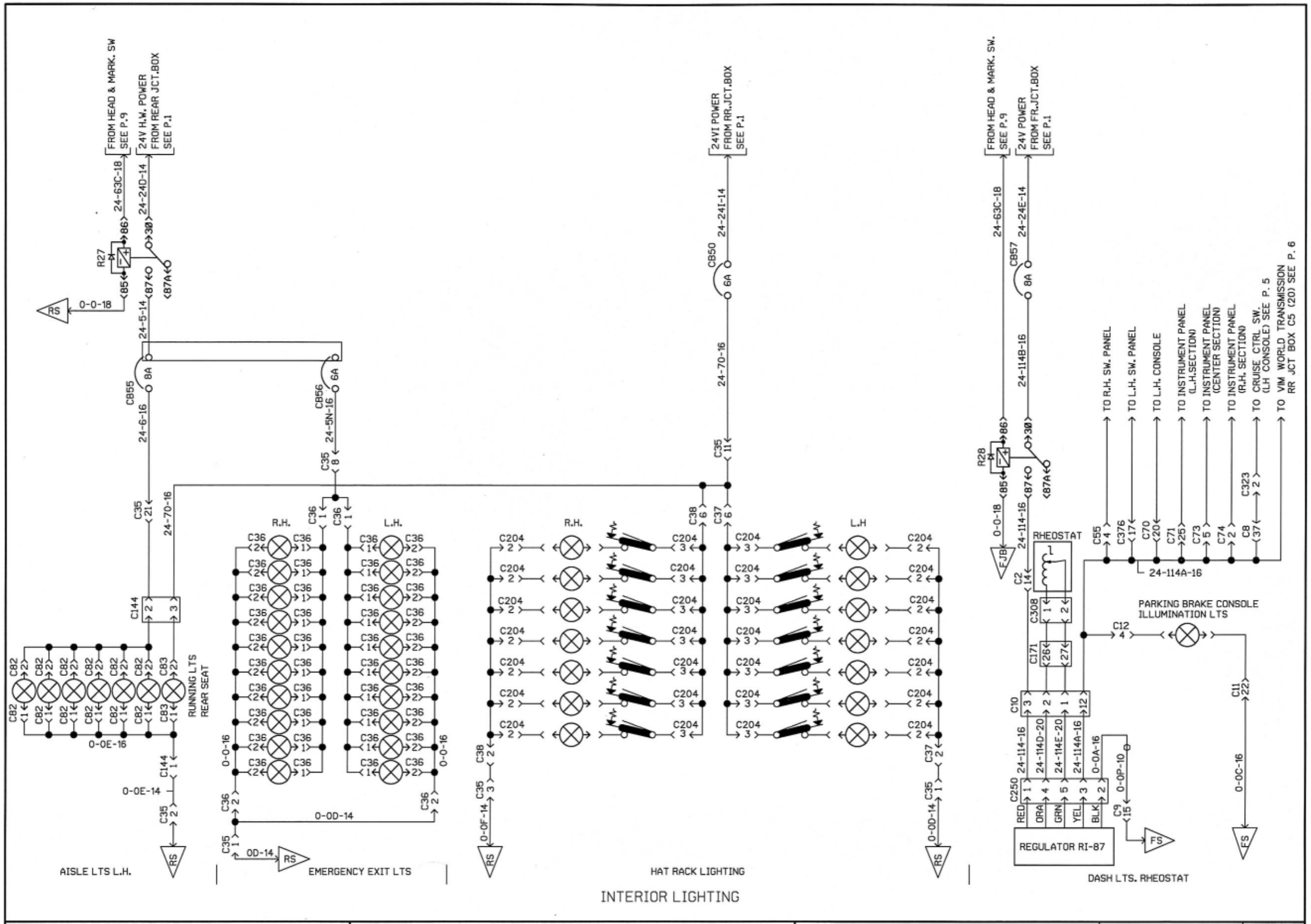

PREVOST CAR inc.	WIRING DIAGRAM	NO: D060869	P. 14	PRIOR	REVISION 000

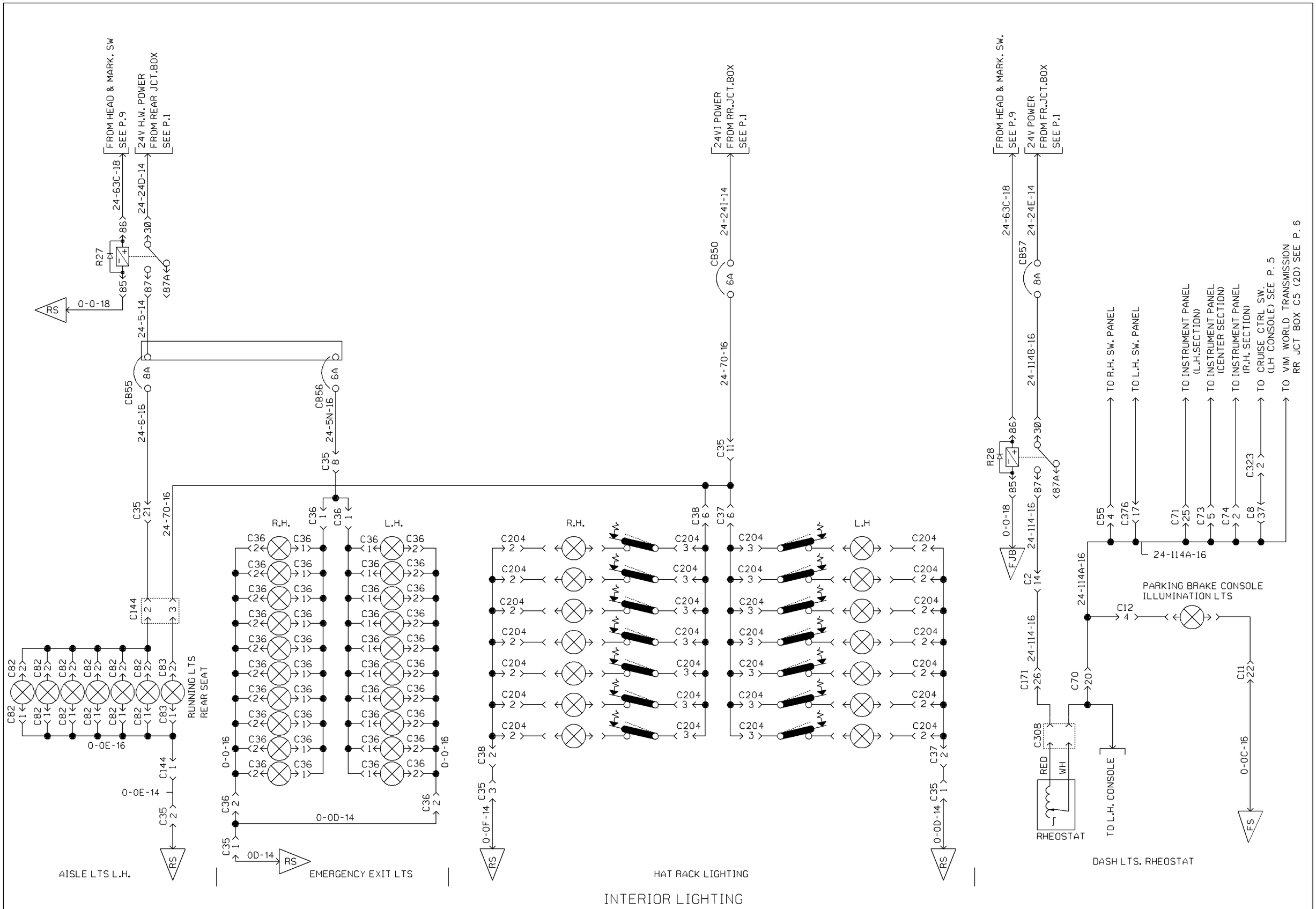

INTERIOR LIGHTING

PREVOST CAR inc.	WIRING DIAGRAM	NO: D060869	P. 14	REVISION 002

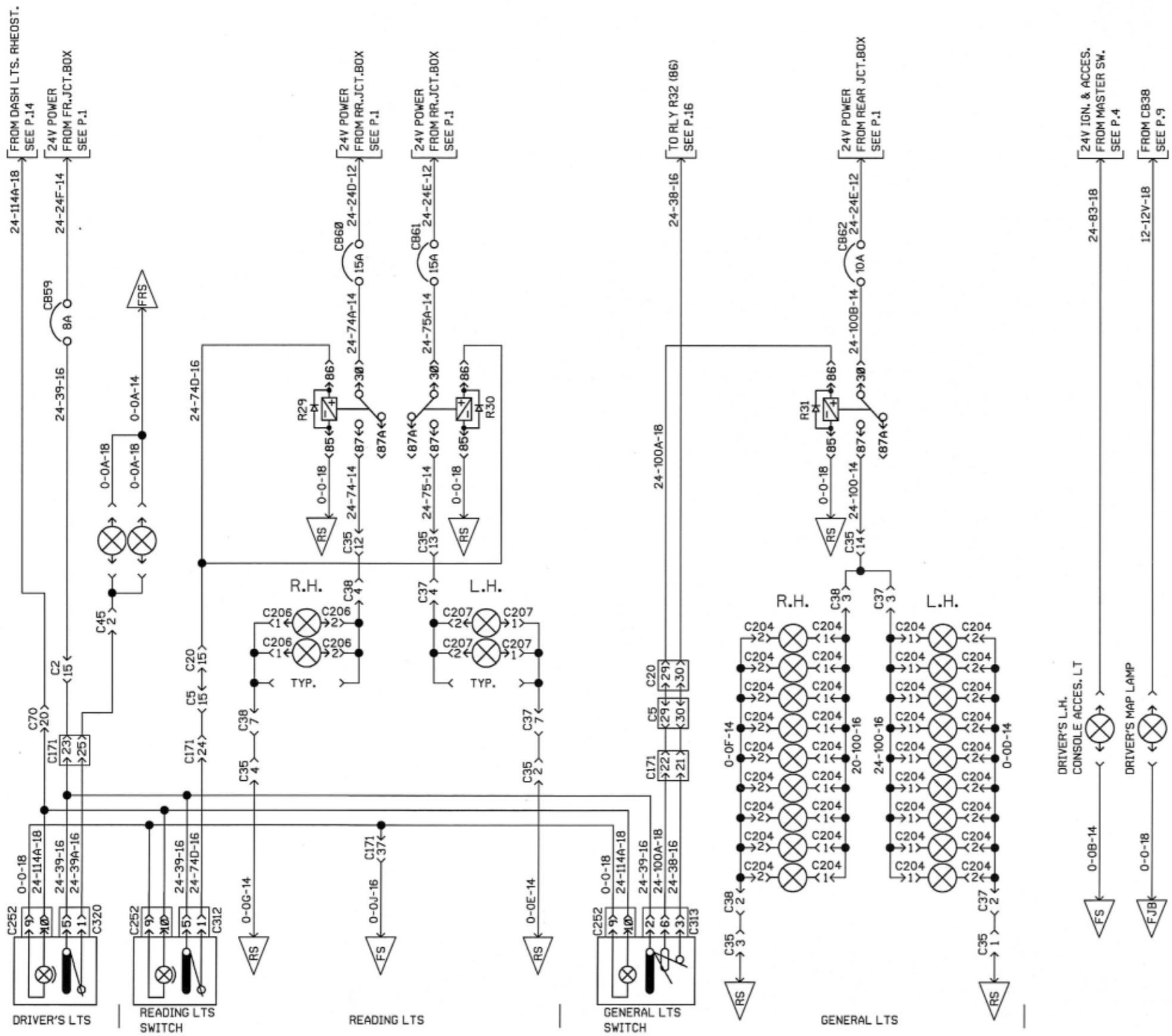

INTERIOR LIGHTING

PREVOST CAR inc.	WIRING DIAGRAM	NO: D060869	P. 15	REVISION 000

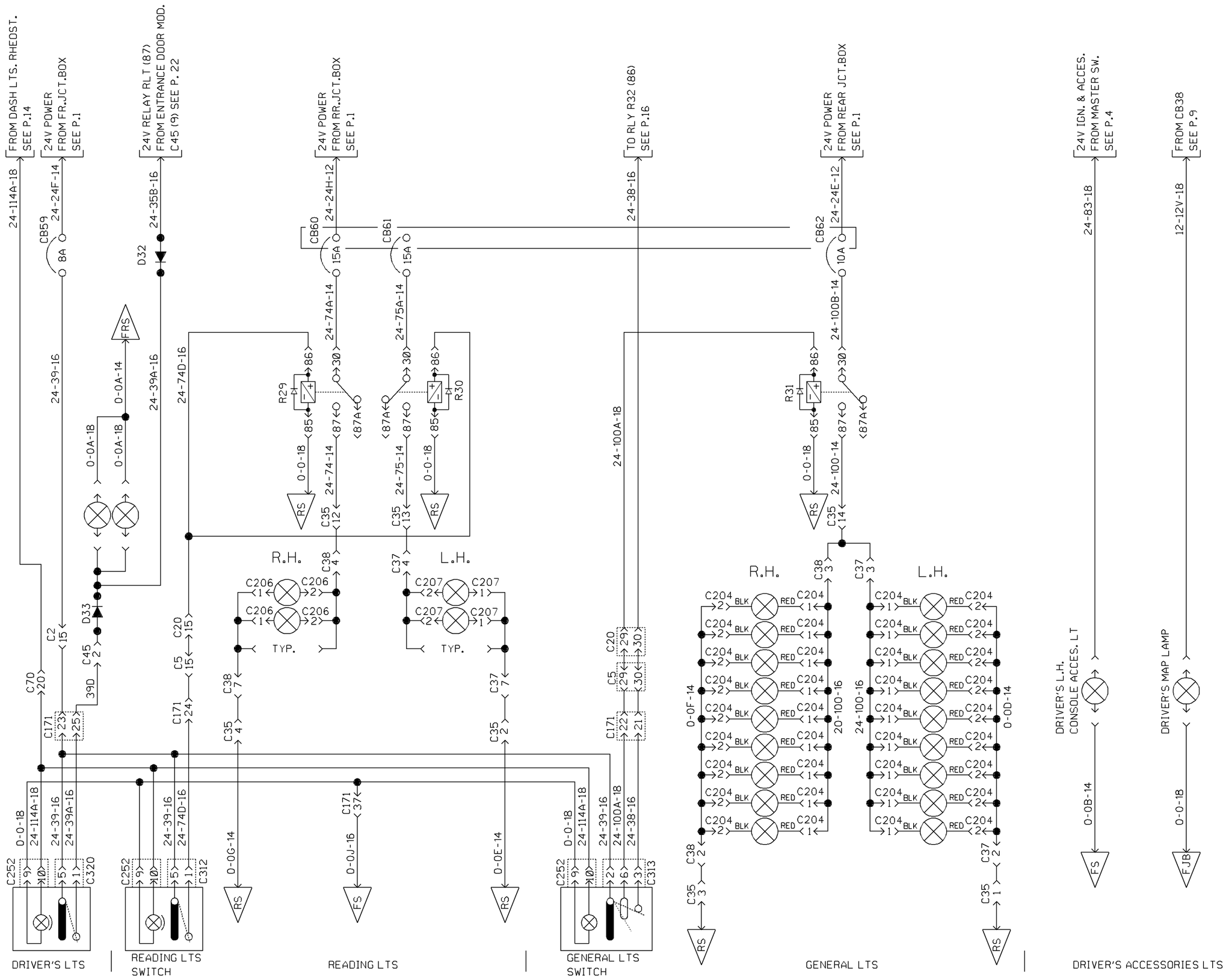

INTERIOR LIGHTING

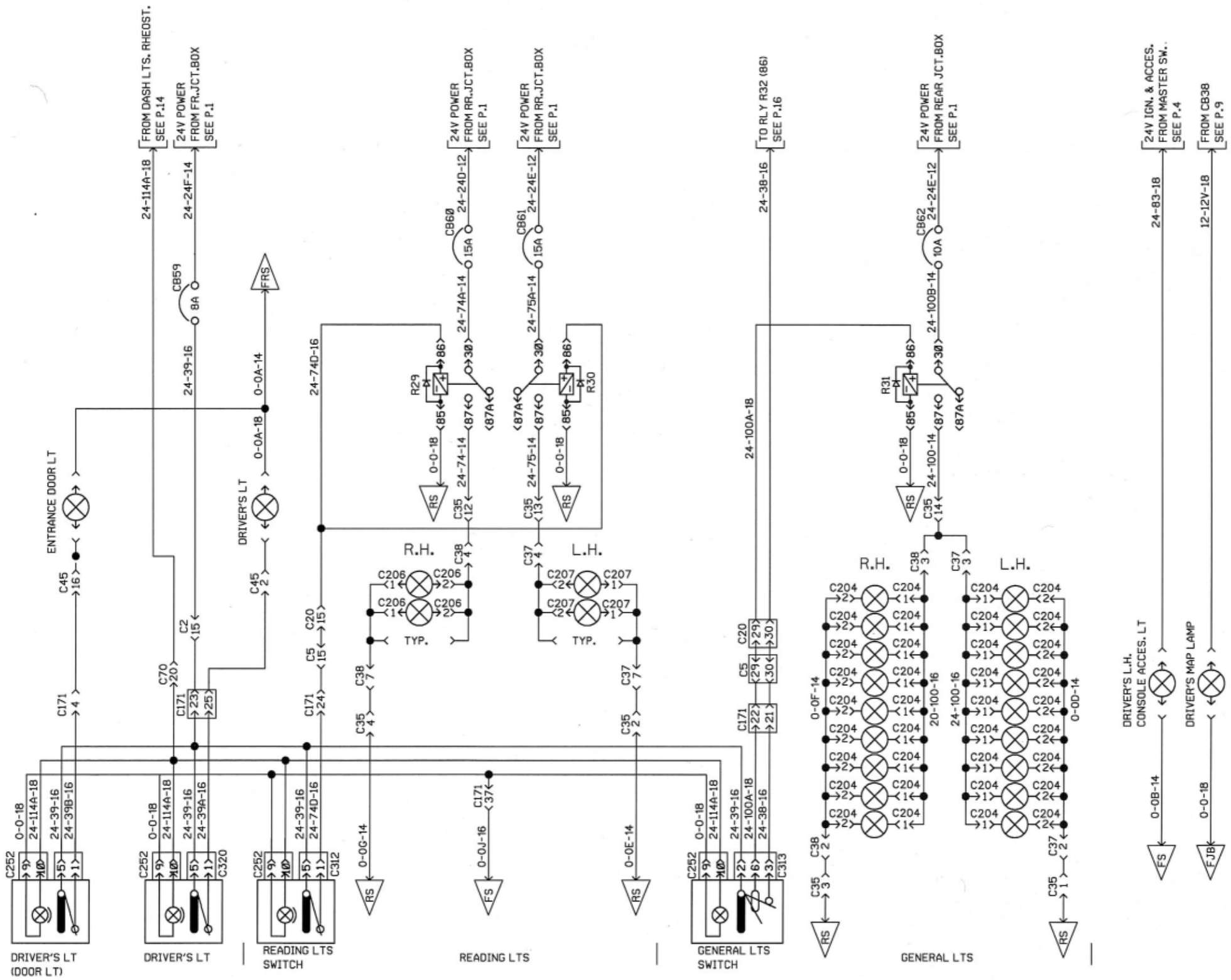

INTERIOR LIGHTING

SPECIAL VEH. T1336

PREVOST CAR inc.	WIRING DIAGRAM	NO: D060869	P.15 SP1	REVISION 000

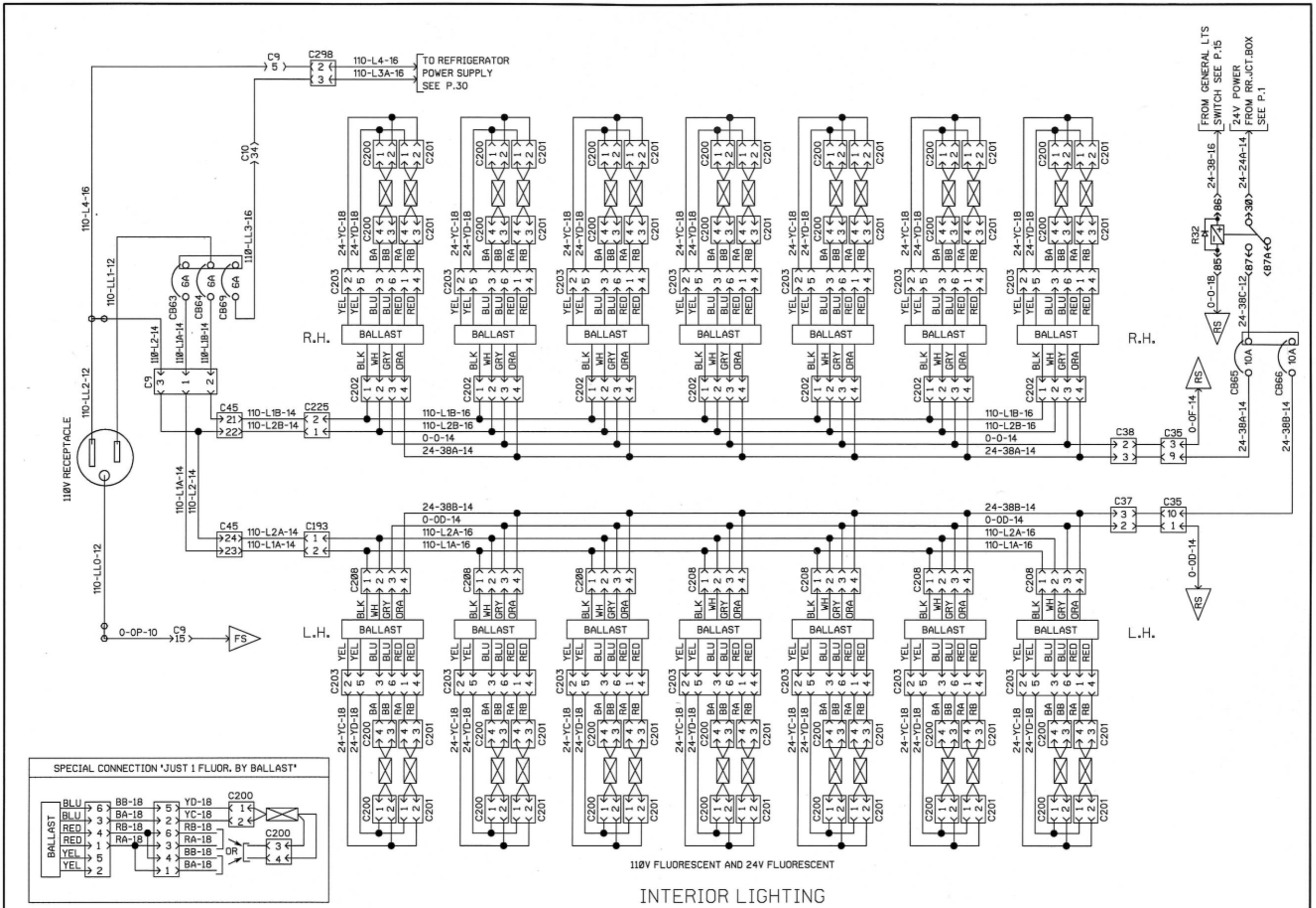

PREVOST CAR inc.	WIRING DIAGRAM	NO: D060869	P. 16	REVISION 000

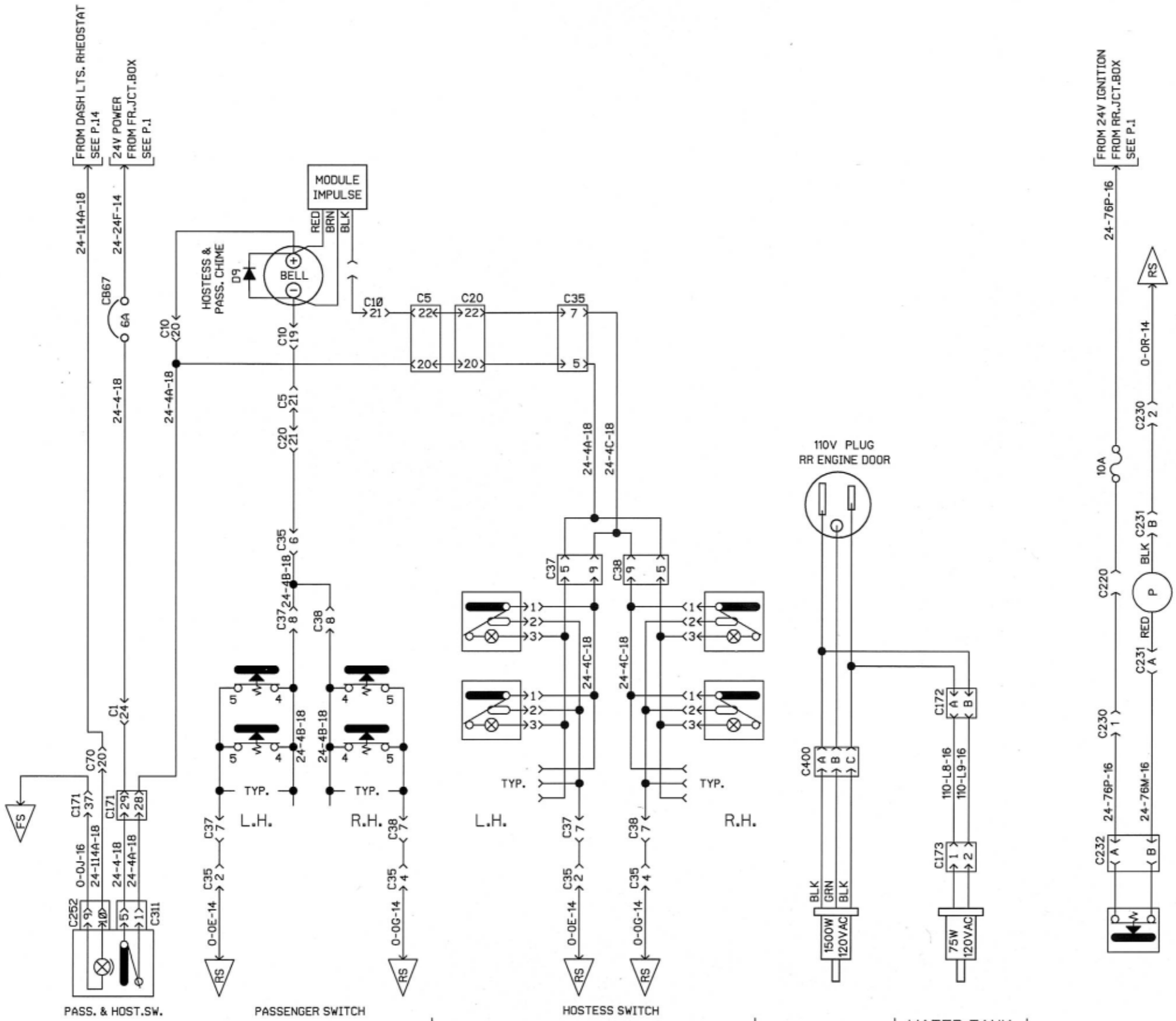

PASSENGER CHIME | HOSTESS CHIME | ENGINE BLOCK HEATER | WATER TANK HEATER | FUEL PRIME PUMP

PREVOST CAR inc.	WIRING DIAGRAM	NO: D060869	P. 17	REVISION 000

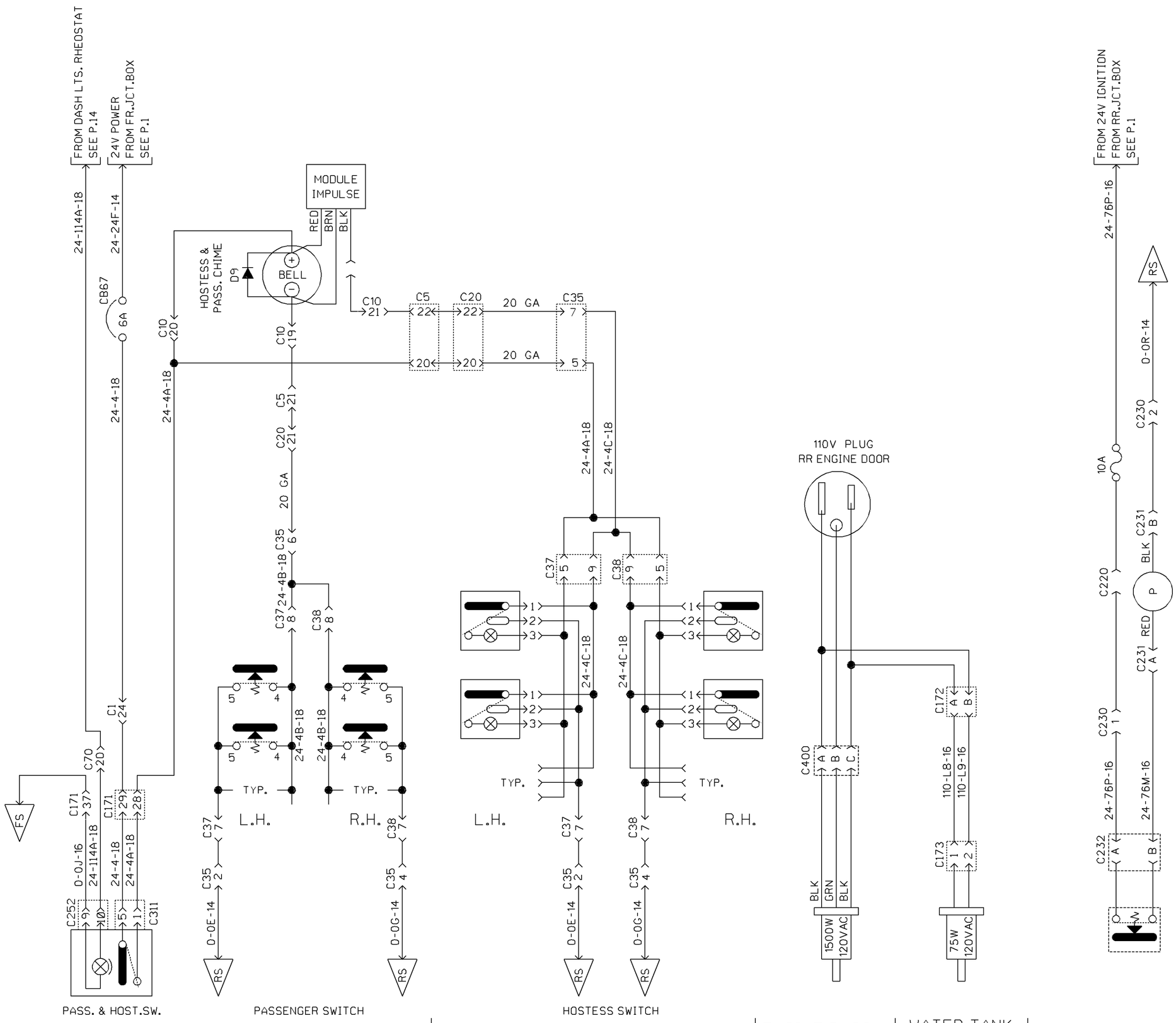

PREVOST CAR inc.	WIRING DIAGRAM	NO: D060869	P. 17	REVISION 021

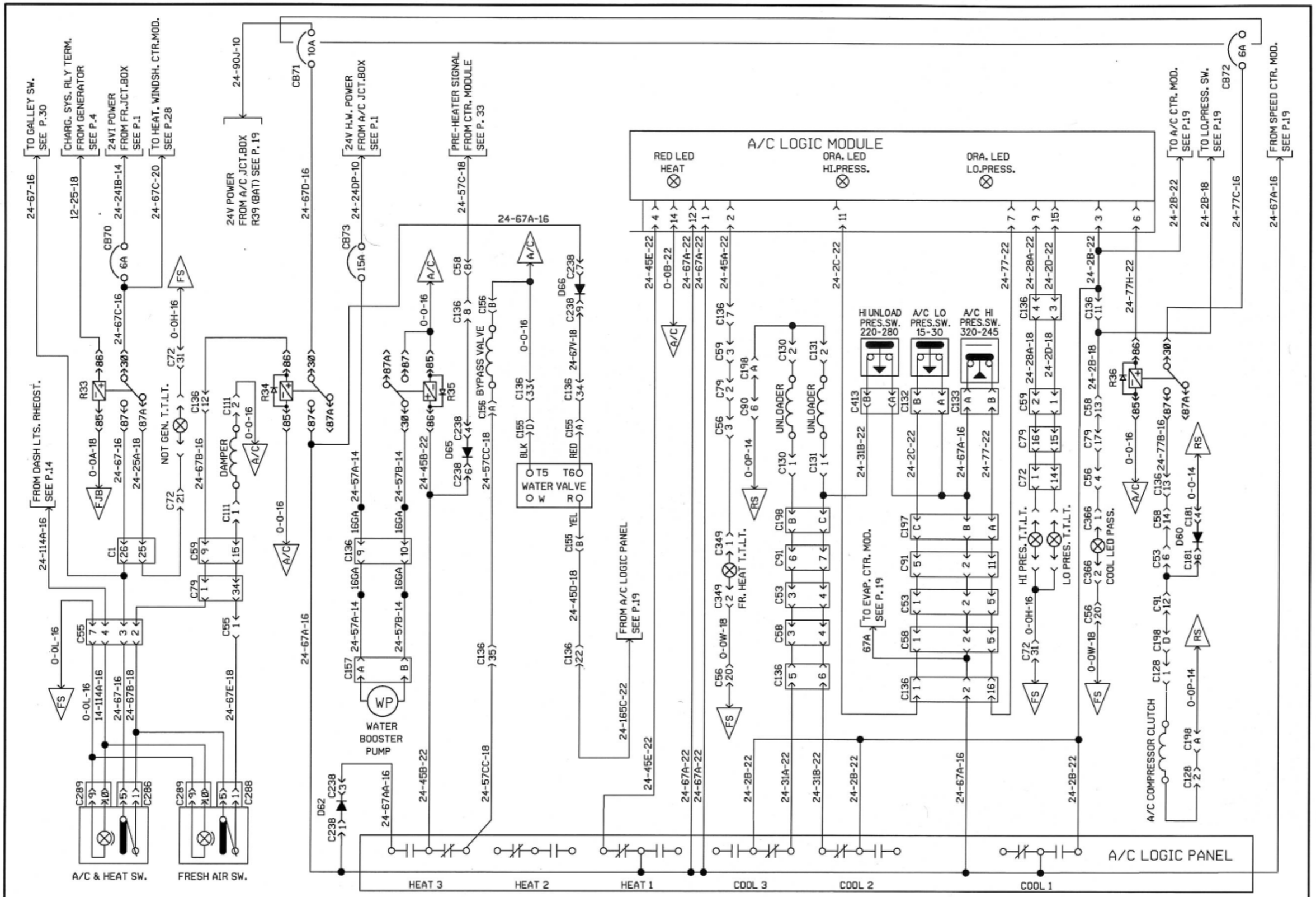

A/C AND HEAT SYSTEM

PREVOST CAR inc.	WIRING DIAGRAM	NO: D060869	P. 18	REVISION 000

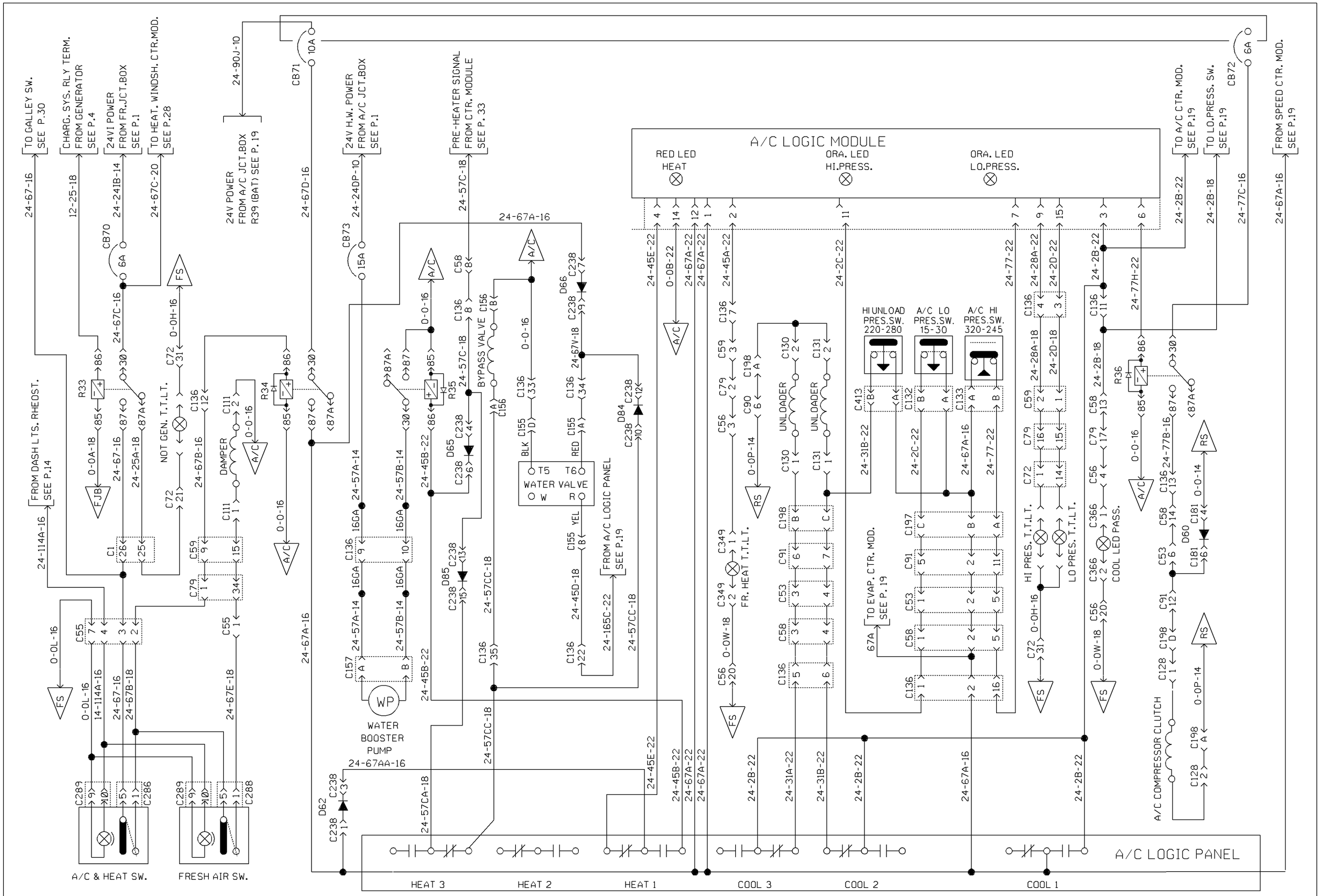

A/C AND HEAT SYSTEM

PREVOST CAR inc.	WIRING DIAGRAM	NO: D060869	P. 18	REVISION 016

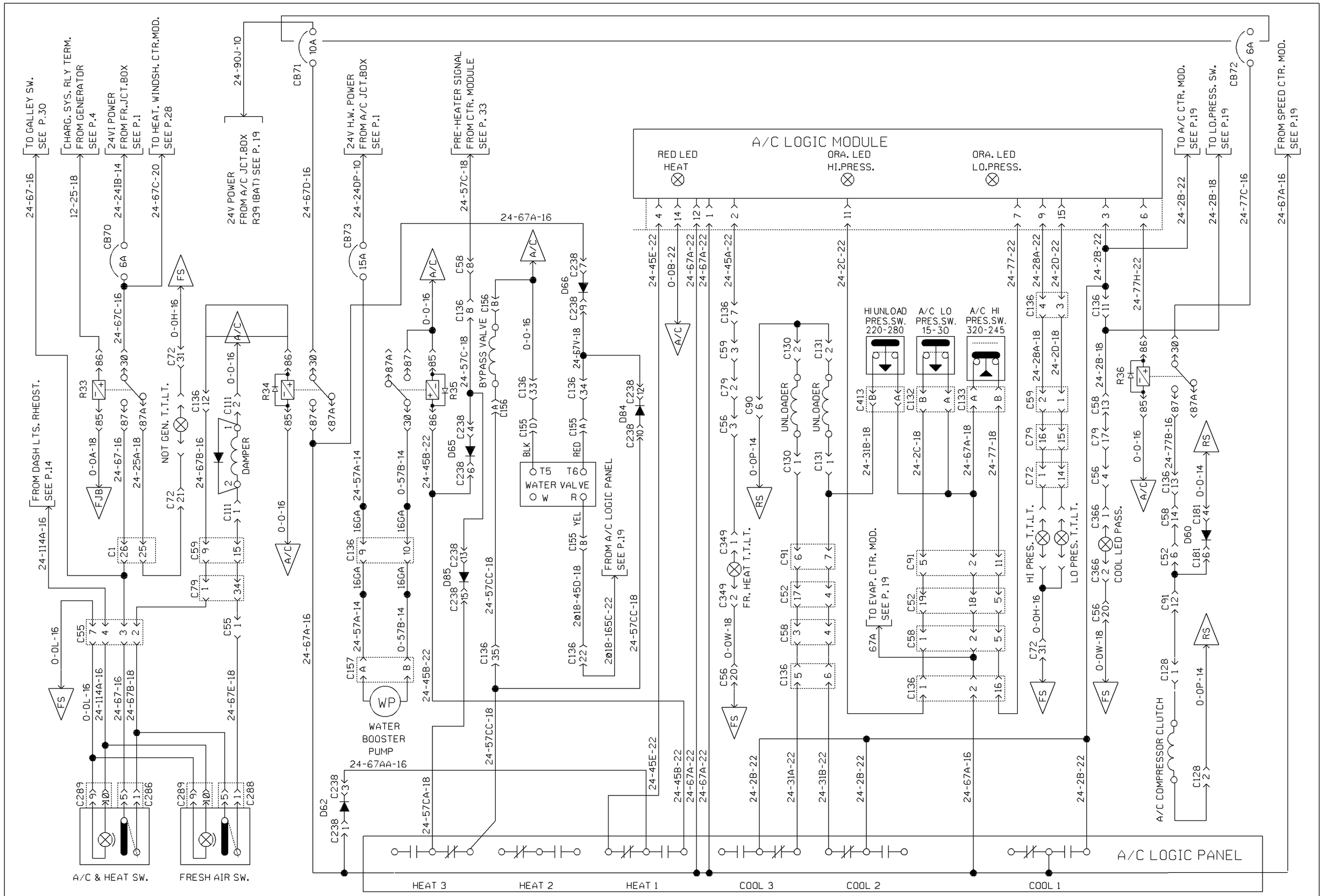

A/C AND HEAT SYSTEM

PREVOST CAR inc.	WIRING DIAGRAM	NO: D060869	P. 18	REVISION 021

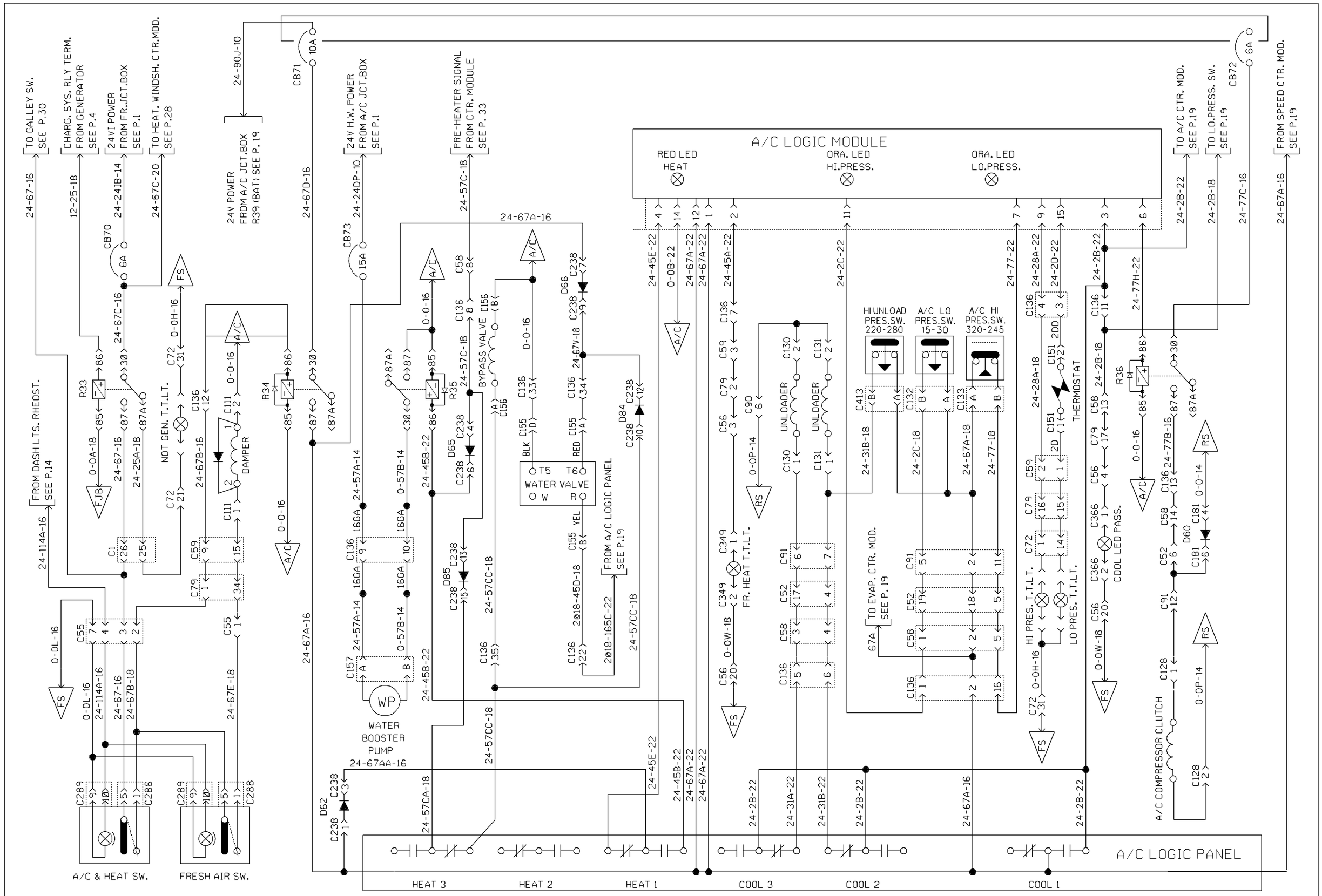

A/C AND HEAT SYSTEM

PREVOST CAR inc.	WIRING DIAGRAM	NO: D060869	P. 18	REVISION 026

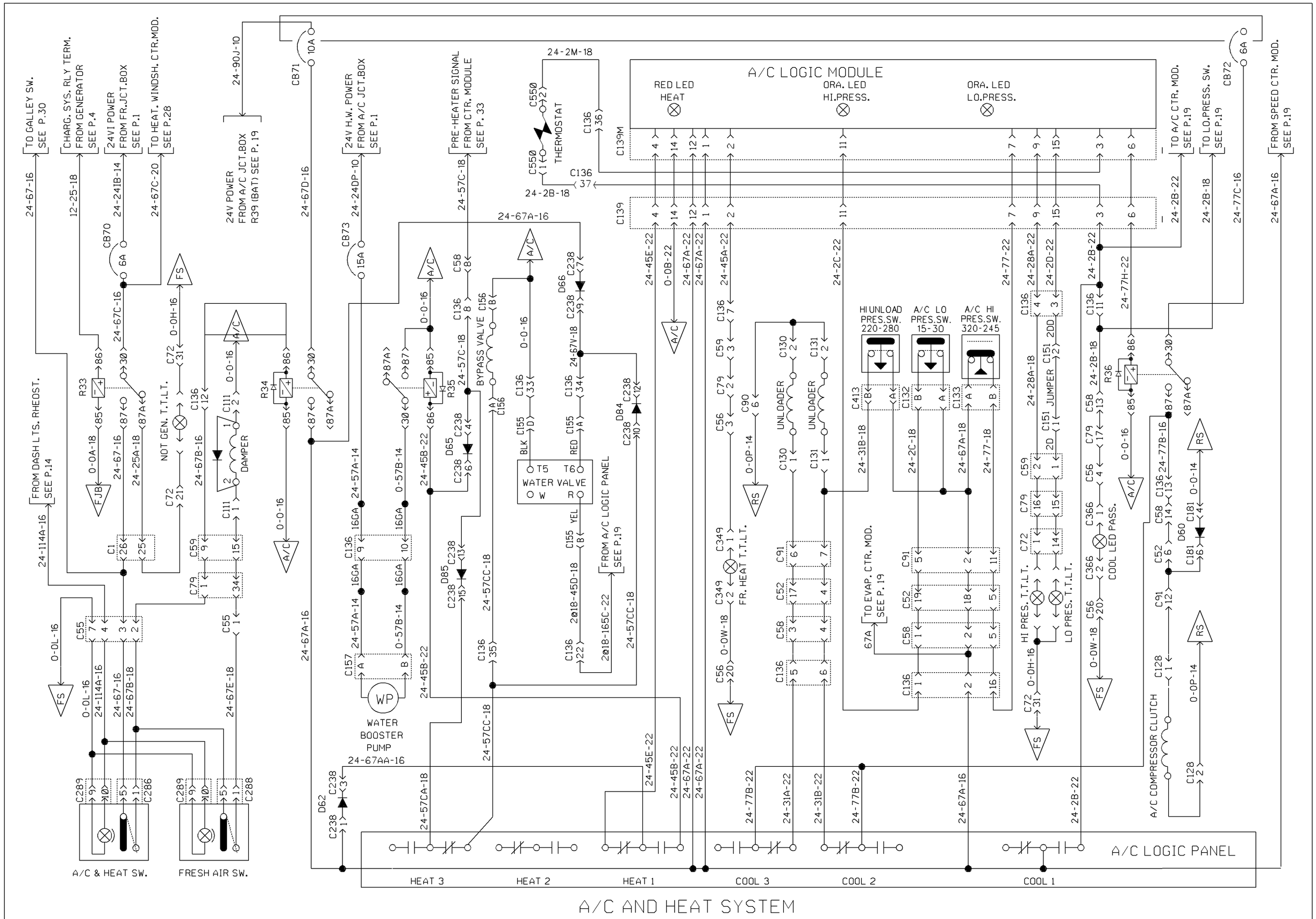

A/C AND HEAT SYSTEM

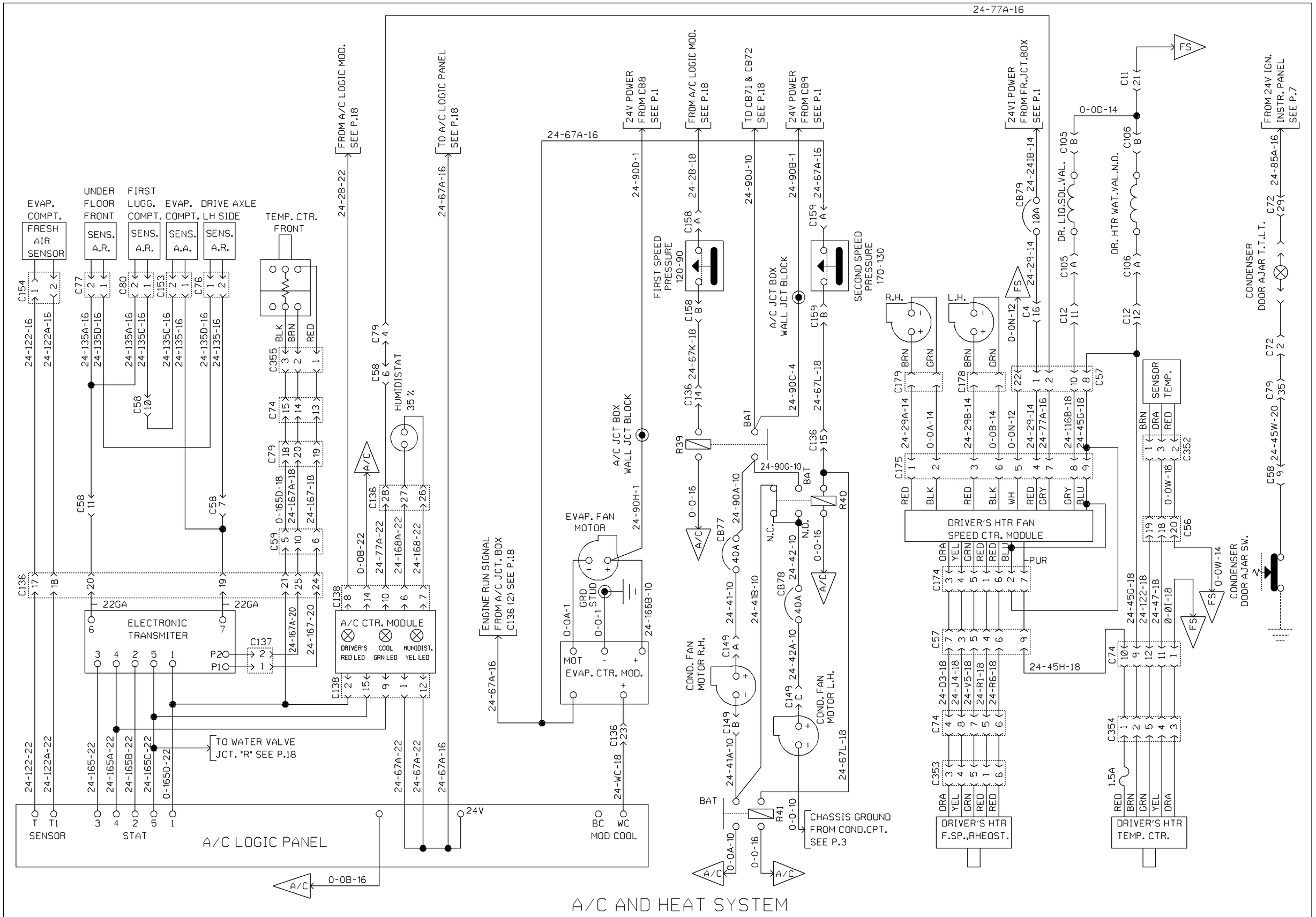

A/C AND HEAT SYSTEM

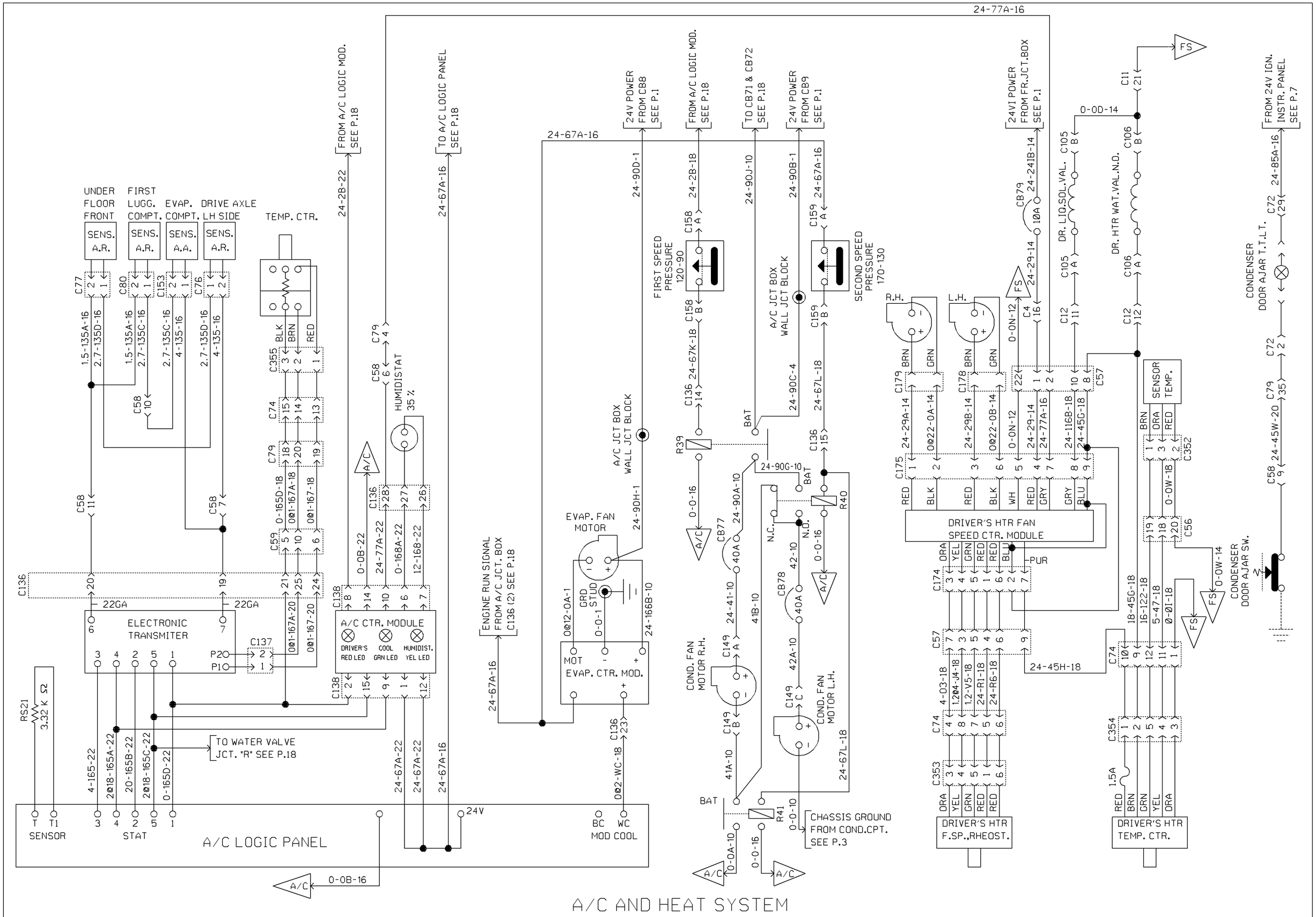

A/C AND HEAT SYSTEM

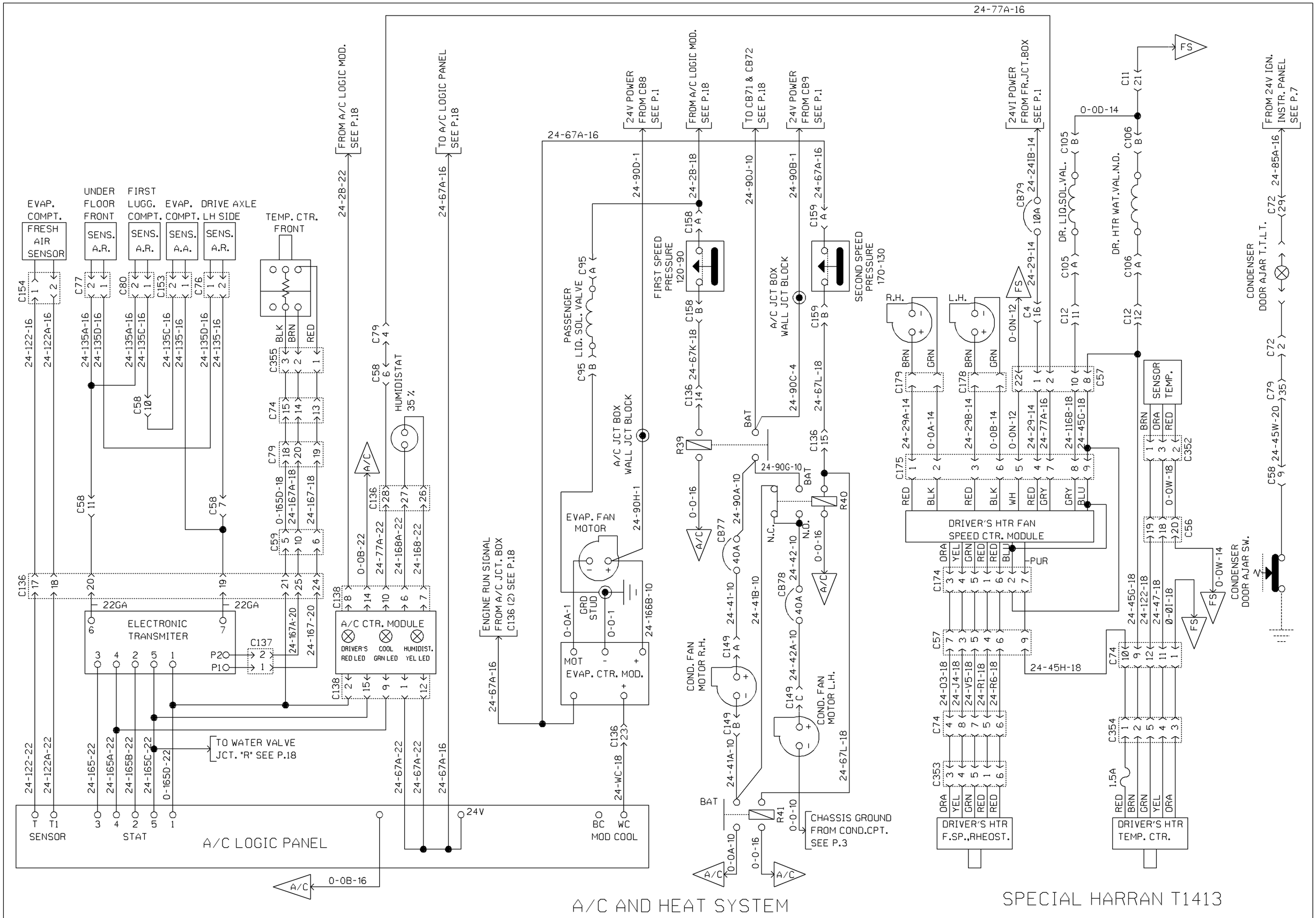
24-77A-16
EVAP. COMPT.
FRESH AIR SENSOR
UNDER FLOOR FRONT
SENS. A.R.
FIRST LUGG. COMPT.
SENS. A.R.
EVAP. COMPT.
SENS. A.A.
DRIVE AXLE LH SIDE
SENS. A.R.
TEMP. CTR. FRONT
FROM A/C LOGIC MOD. SEE P.18
24-2B-22
TO A/C LOGIC PANEL SEE P.18
24-67A-16
24V POWER FROM CB8 SEE P.1
FROM A/C LOGIC MOD. SEE P.18
TO CB71 & CB72 SEE P.18
24V POWER FROM CB9 SEE P.1
24VI POWER FROM FR.JCT.BOX SEE P.1
FROM 24V IGN. INSTR. PANEL SEE P.7
PASSENGER LIQ. SOL. VALVE
FIRST SPEED PRESSURE 120-90
A/C JCT BOX WALL JCT BLOCK
SECOND SPEED PRESSURE 170-130
R.H.
L.H.
DR. LIQ.SOL.VAL.
DR. HTR WAT.VAL.N.D.
CONDENSER DOOR AJAR T.T.L.T.
HUMIDISTAT 35 %
EVAP. FAN MOTOR
ENGINE RUN SIGNAL FROM A/C JCT. BOX C136 (2) SEE P.18
ELECTRONIC TRANSMITER
A/C CTR. MODULE
DRIVER'S RED LED
COOL GRN LED
HUMIDIST. YEL LED
EVAP. CTR. MOD.
TO WATER VALVE JCT. "R" SEE P.18
A/C LOGIC PANEL
SENSOR
STAT
MOD COOL
COND. FAN MOTOR R.H.
COND. FAN MOTOR L.H.
CHASSIS GROUND FROM COND.CPT. SEE P.3
DRIVER'S HTR FAN SPEED CTR. MODULE
SENSOR TEMP.
CONDENSER DOOR AJAR SW.
DRIVER'S HTR F.SP.,RHEOST.
DRIVER'S HTR TEMP. CTR.
A/C AND HEAT SYSTEM
SPECIAL HARRAN T1413

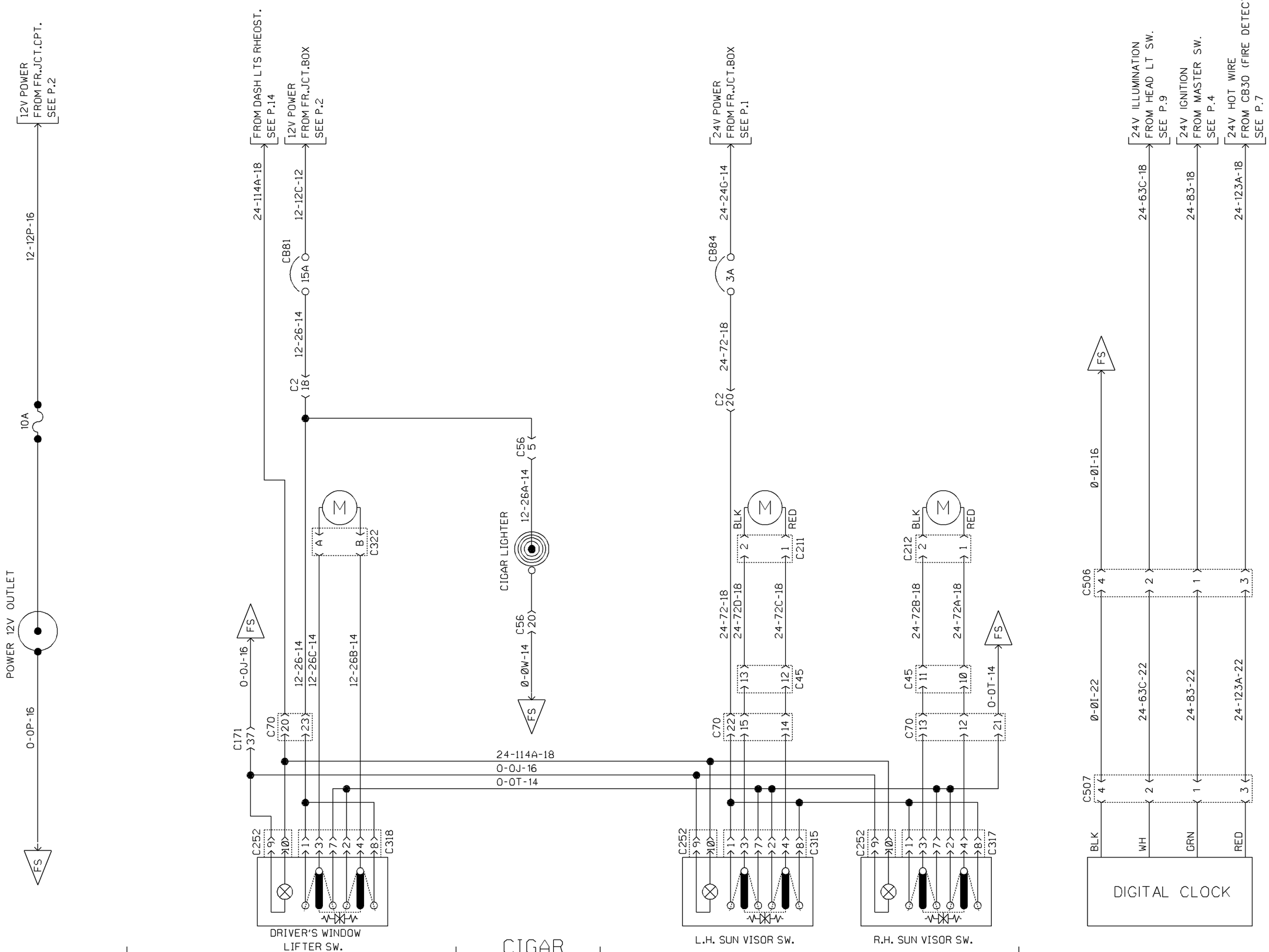

POWER 12V OUTLET | DRIVER'S WINDOW LIFTER | CIGAR LIGHTER | SUN VISOR | DIGITAL CLOCK

PREVOST CAR inc.	WIRING DIAGRAM	NO: D060869	P. 20	REVISION 004

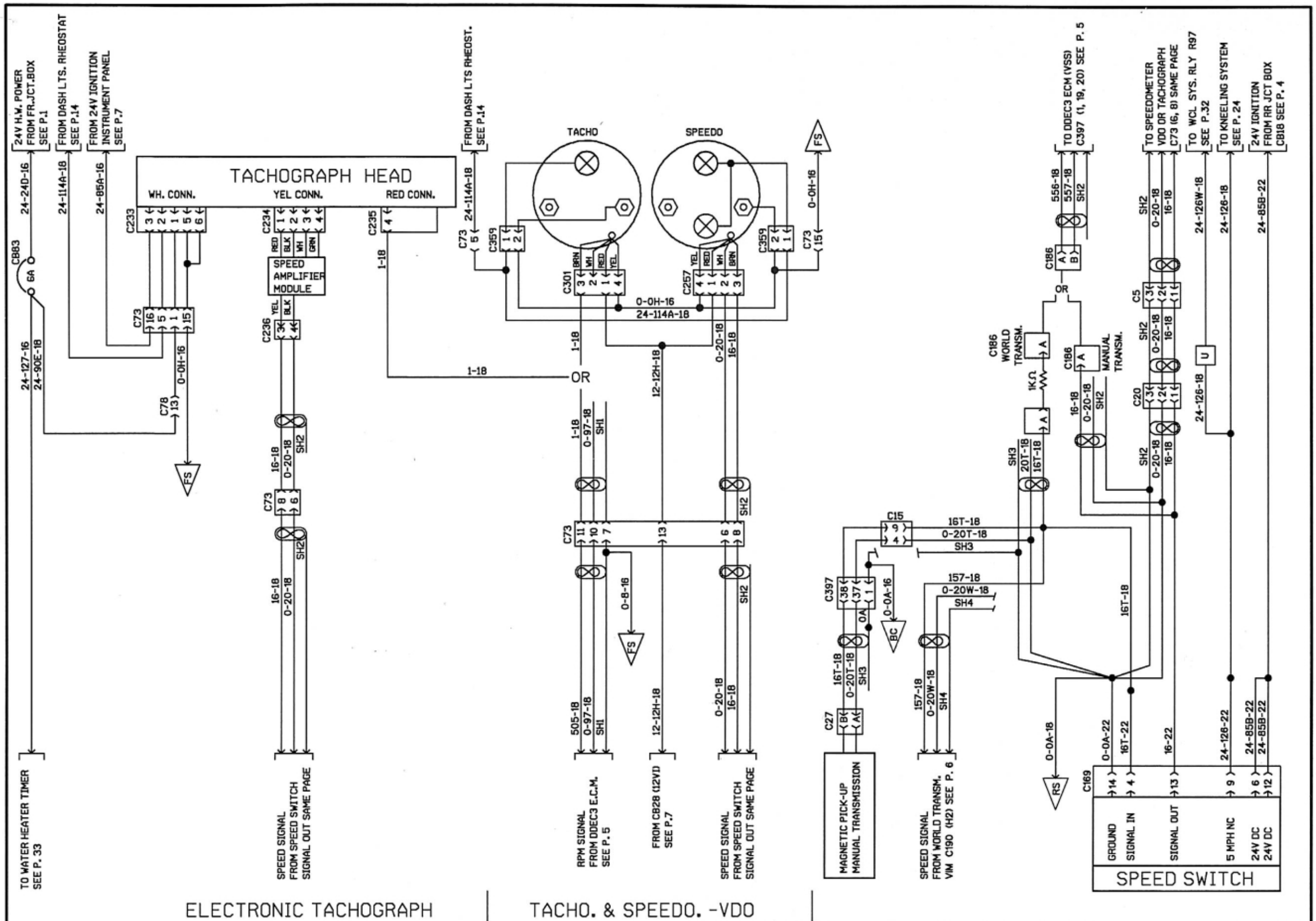

ELECTRONIC TACHOGRAPH | TACHO. & SPEEDO. -VDO

PREVOST CAR inc.	WIRING DIAGRAM	NO: D060869	P. 21	REVISION 000

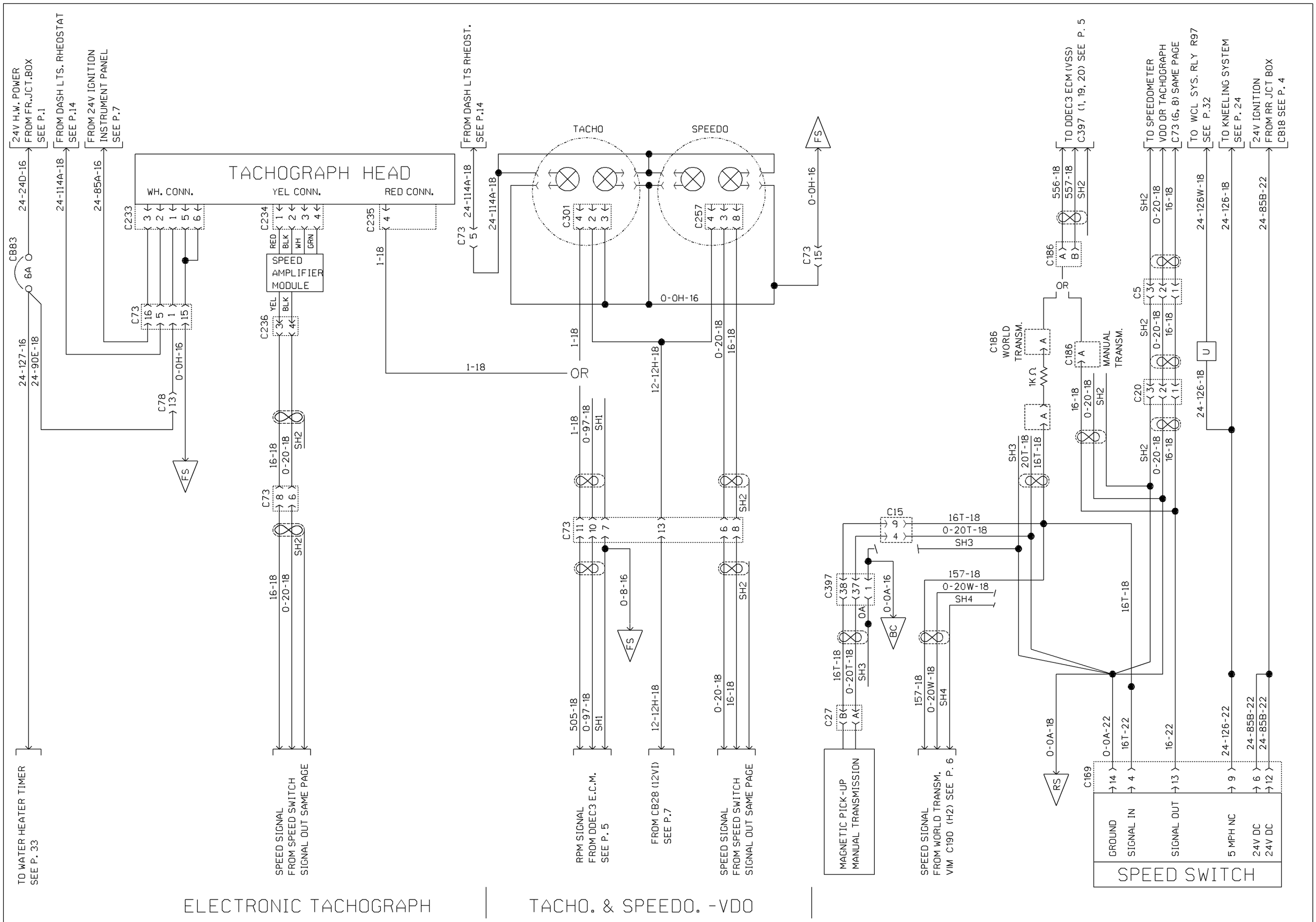

ELECTRONIC TACHOGRAPH | TACHO. & SPEEDO. -VDO

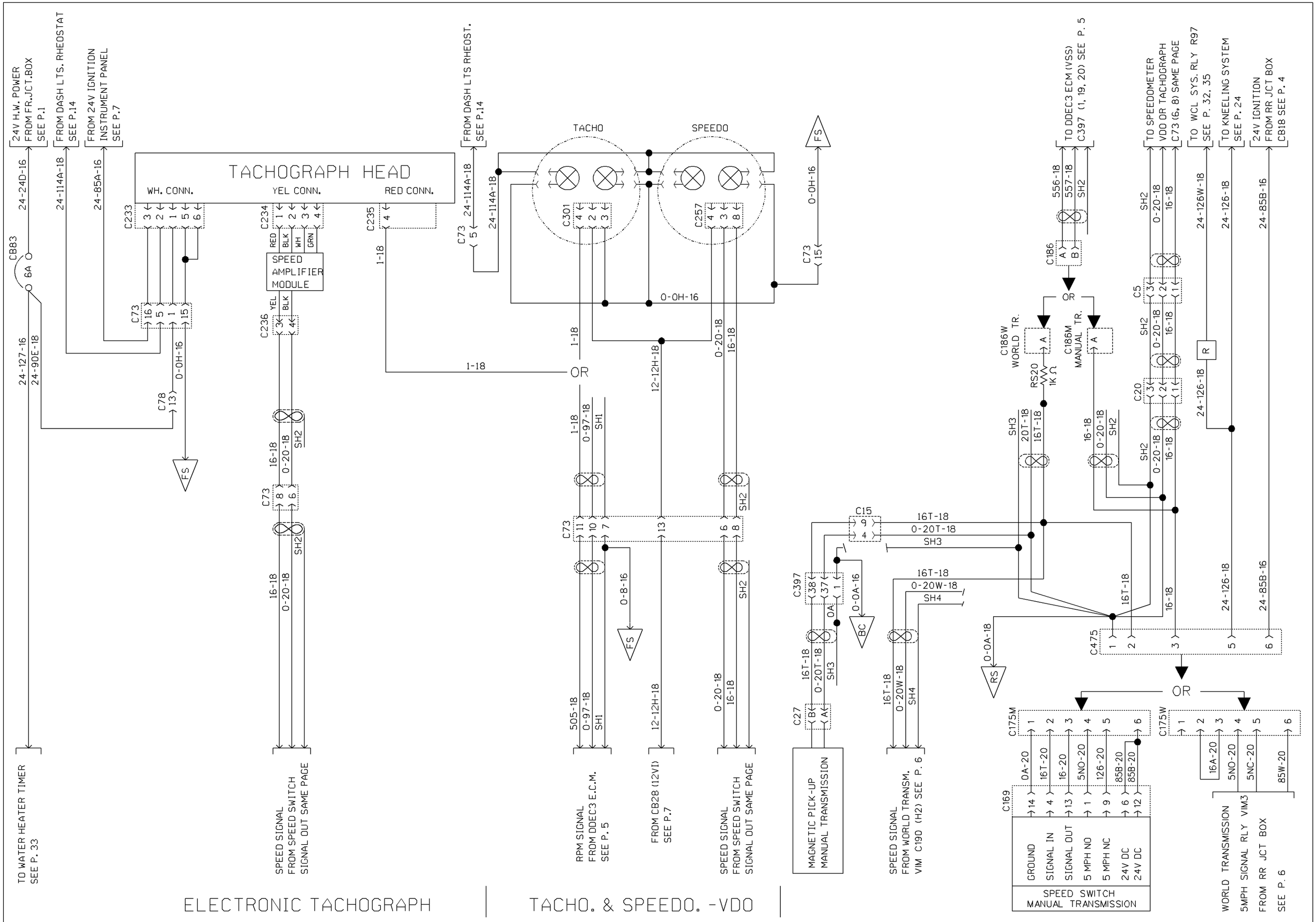

ELECTRONIC TACHOGRAPH | TACHO. & SPEEDO. -VDO

PREVOST CAR inc. | WIRING DIAGRAM | NO: D060869 | P. 21 | REVISION 021

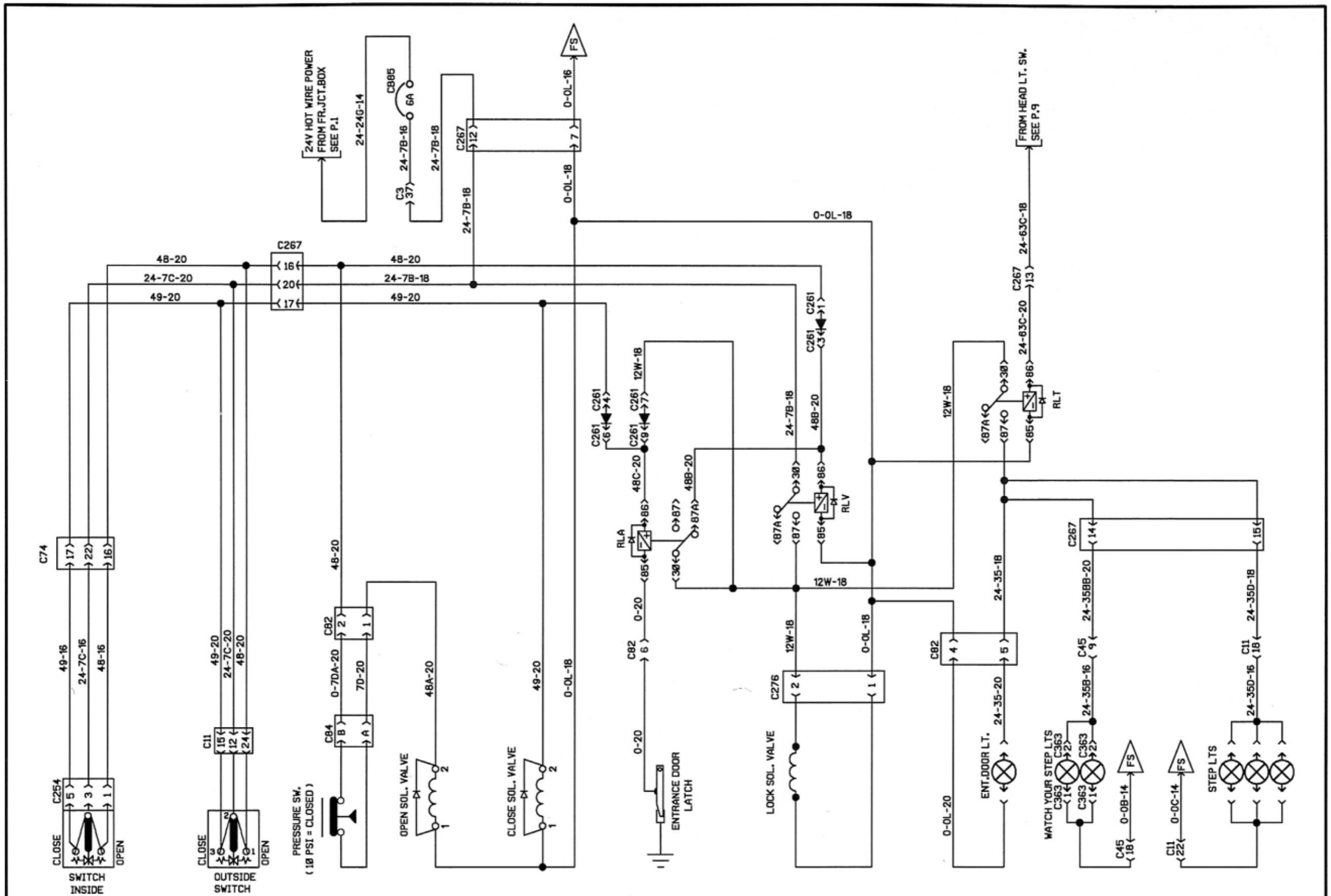

ENTRANCE DOOR (SEDAN)

PREVOST CAR inc.	WIRING DIAGRAM	NO: D060869	P. 22 PRIOR	REVISION 000

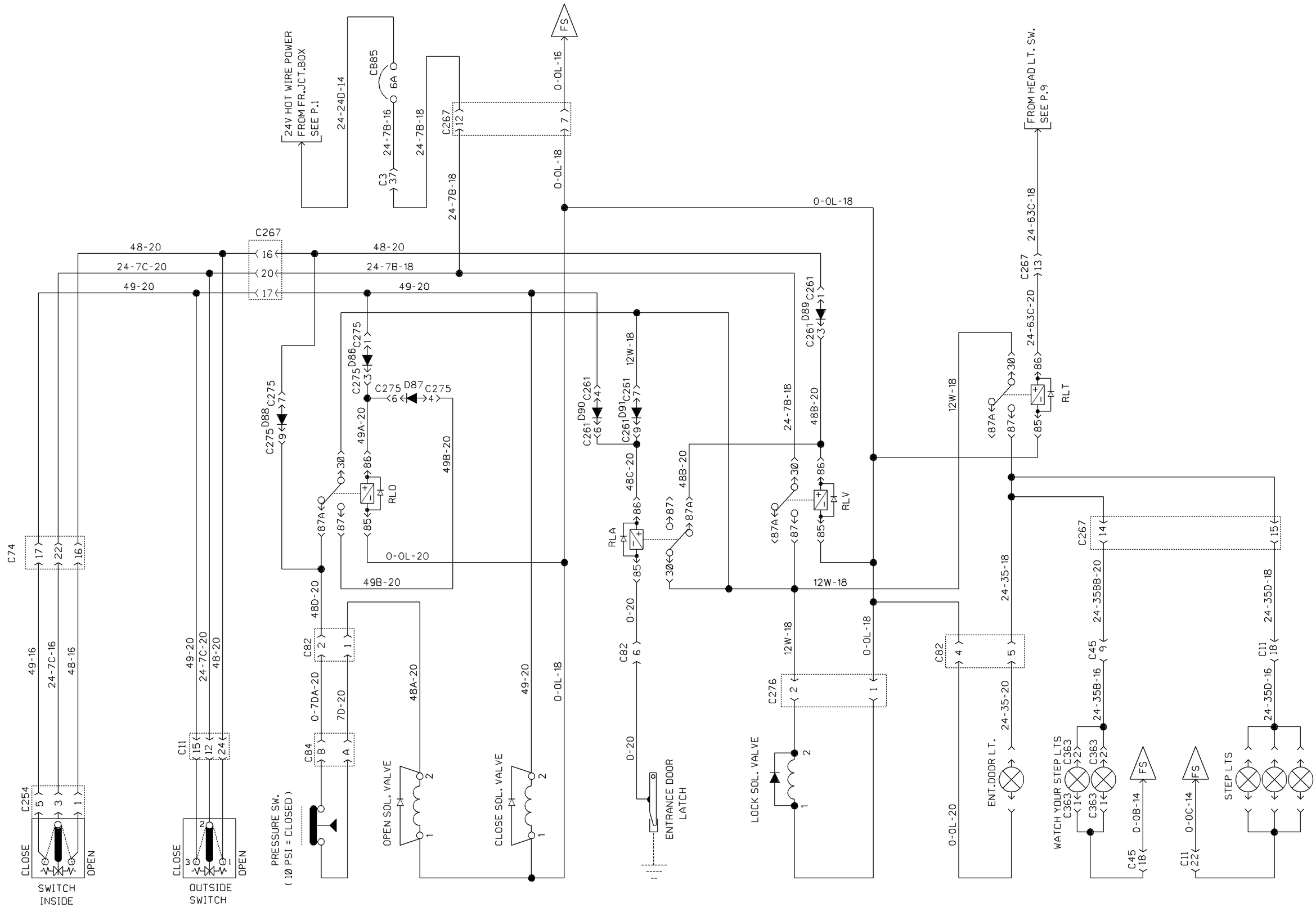

ENTRANCE DOOR (SEDAN)

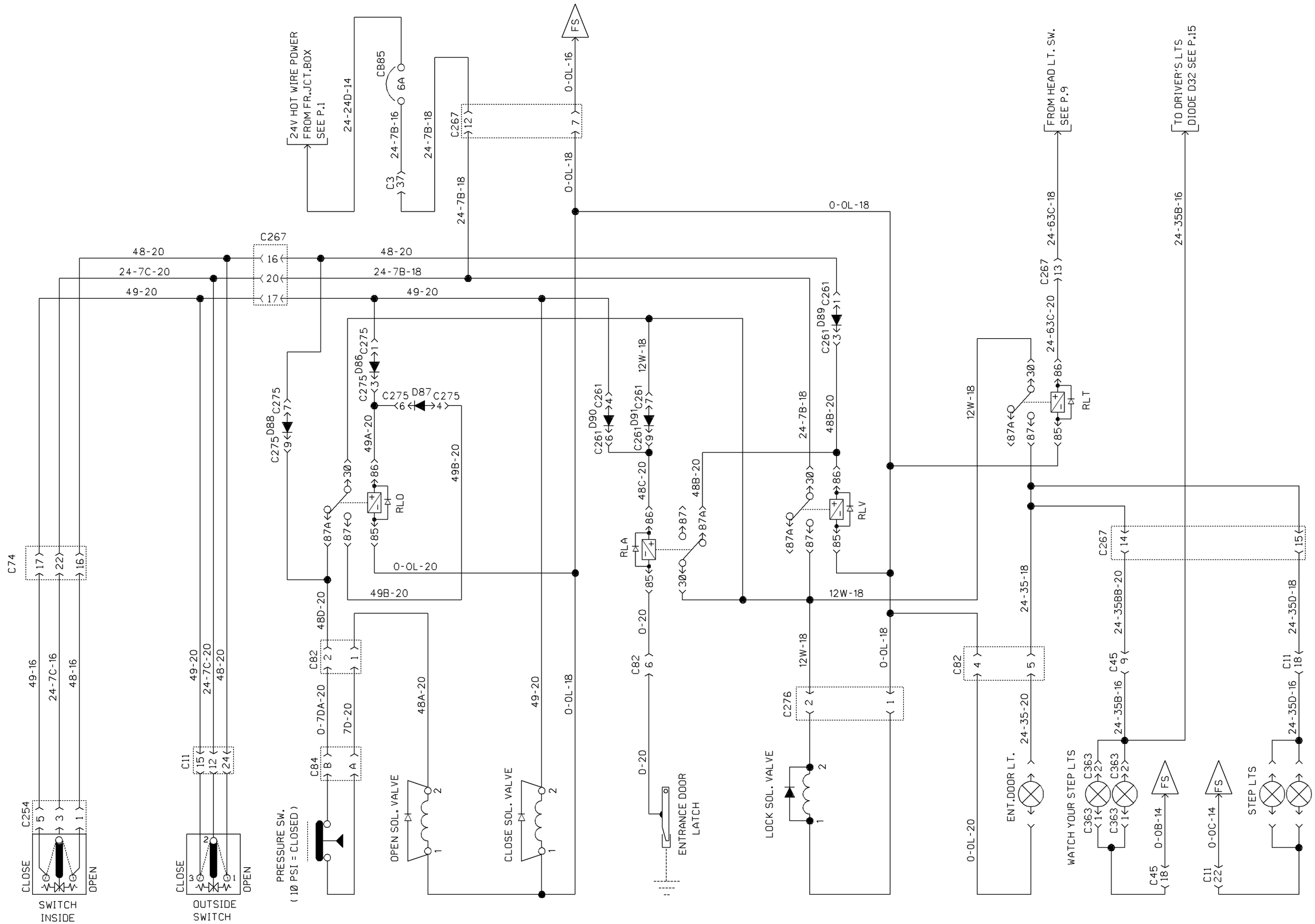

ENTRANCE DOOR (SEDAN)

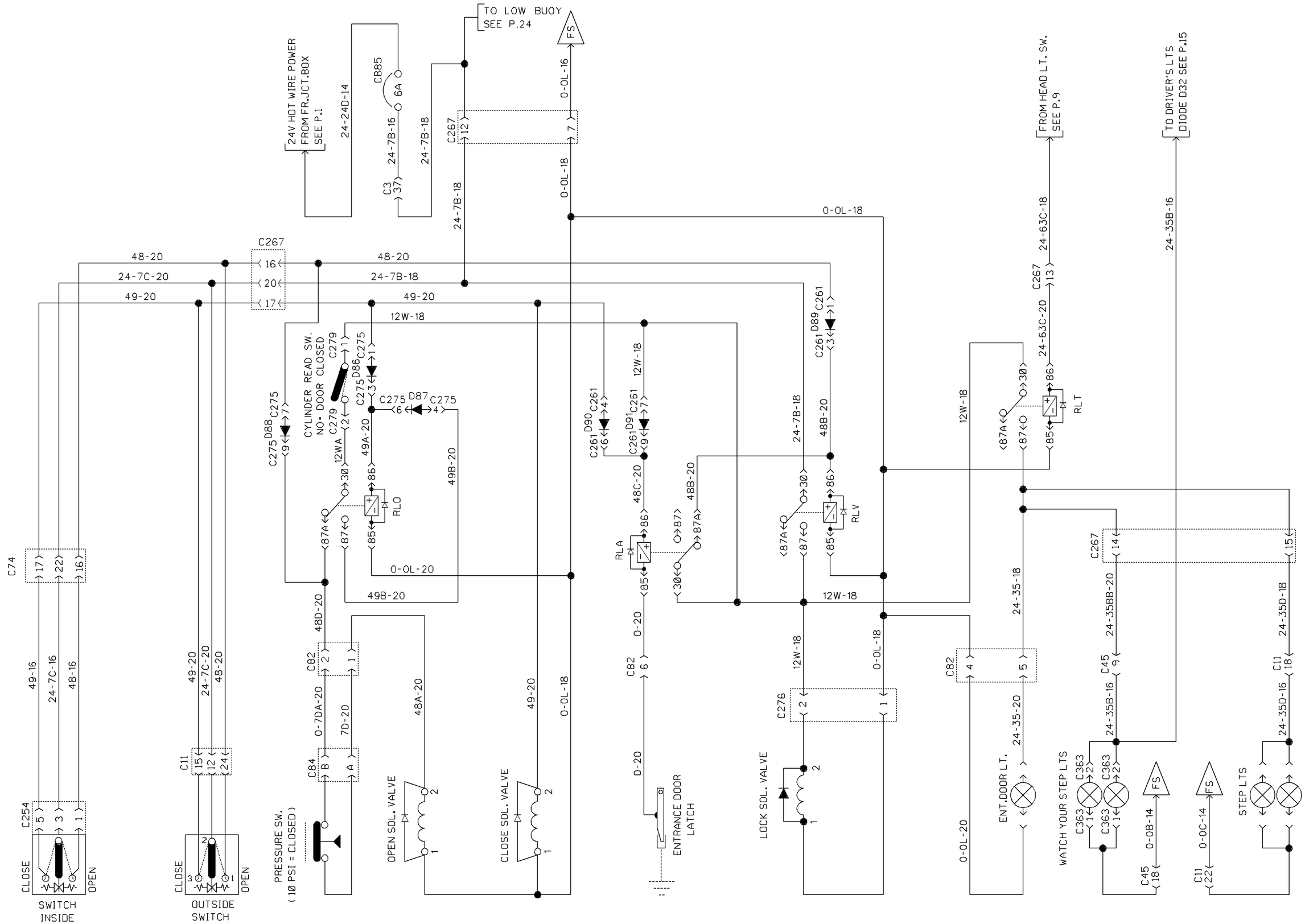

ENTRANCE DOOR (SEDAN)

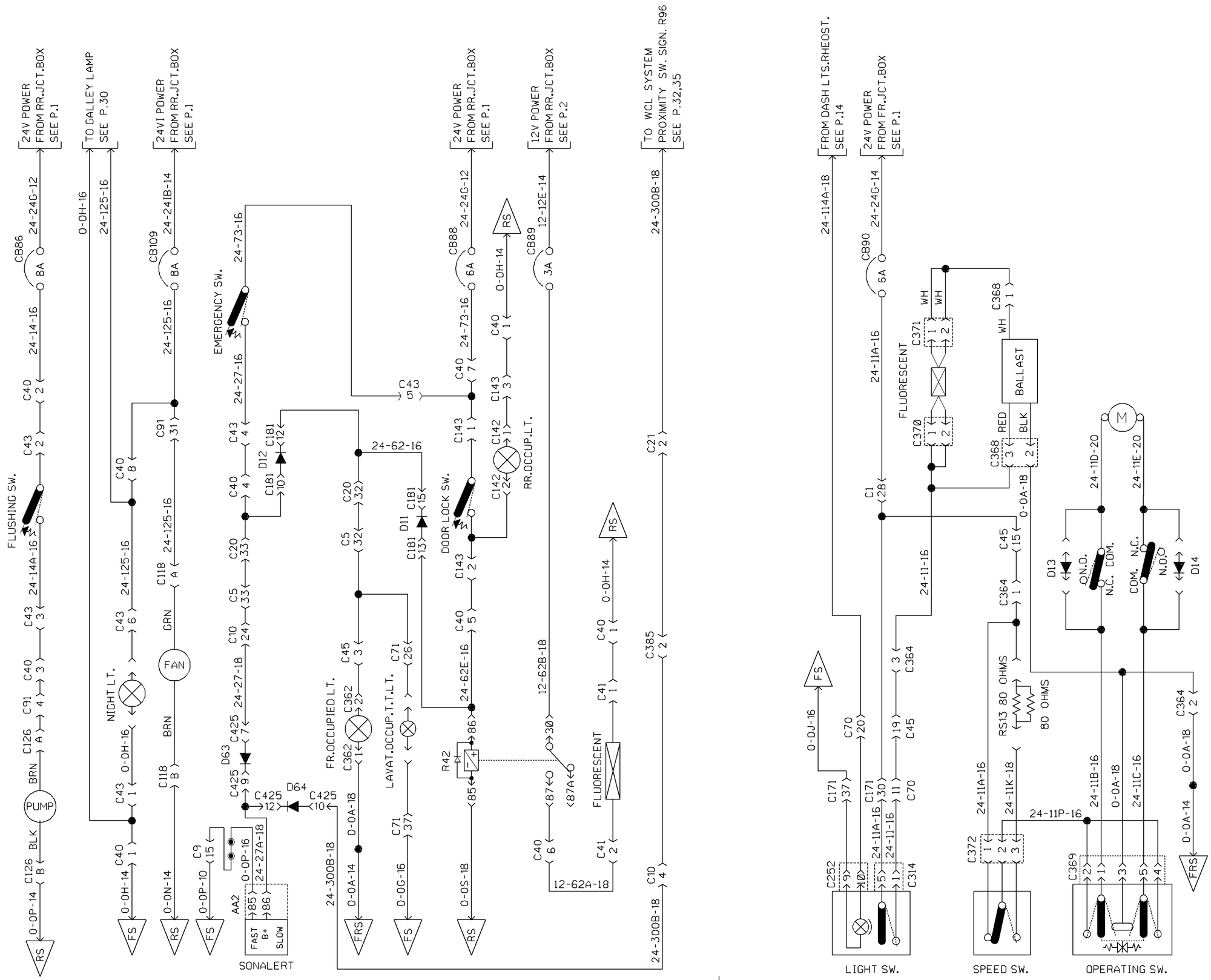

PREVOST CAR inc.	WIRING DIAGRAM	NO: D060869	P. 23	REVISION 020

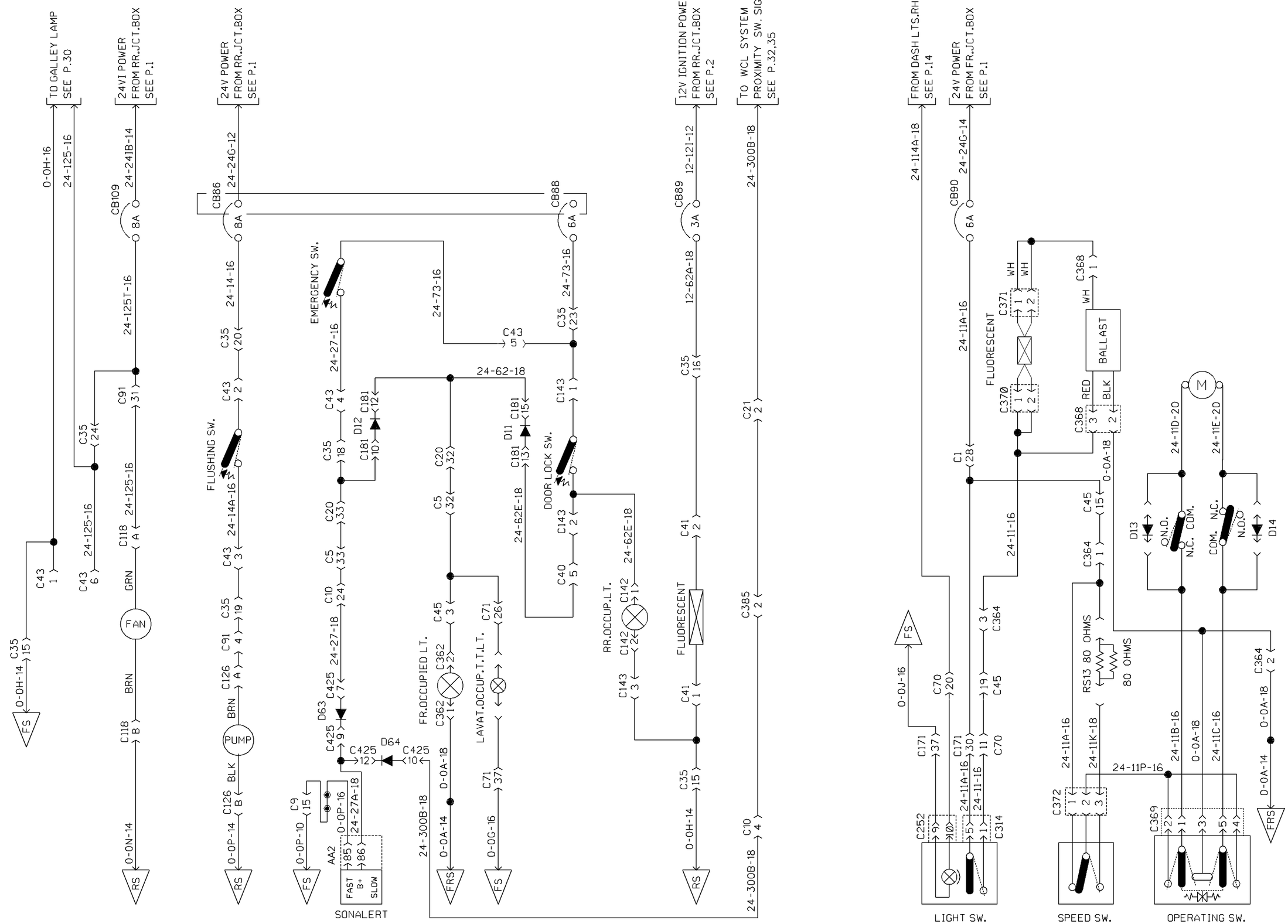

PREVOST CAR inc.	WIRING DIAGRAM	NO: D060869	P. 23	REVISION 021

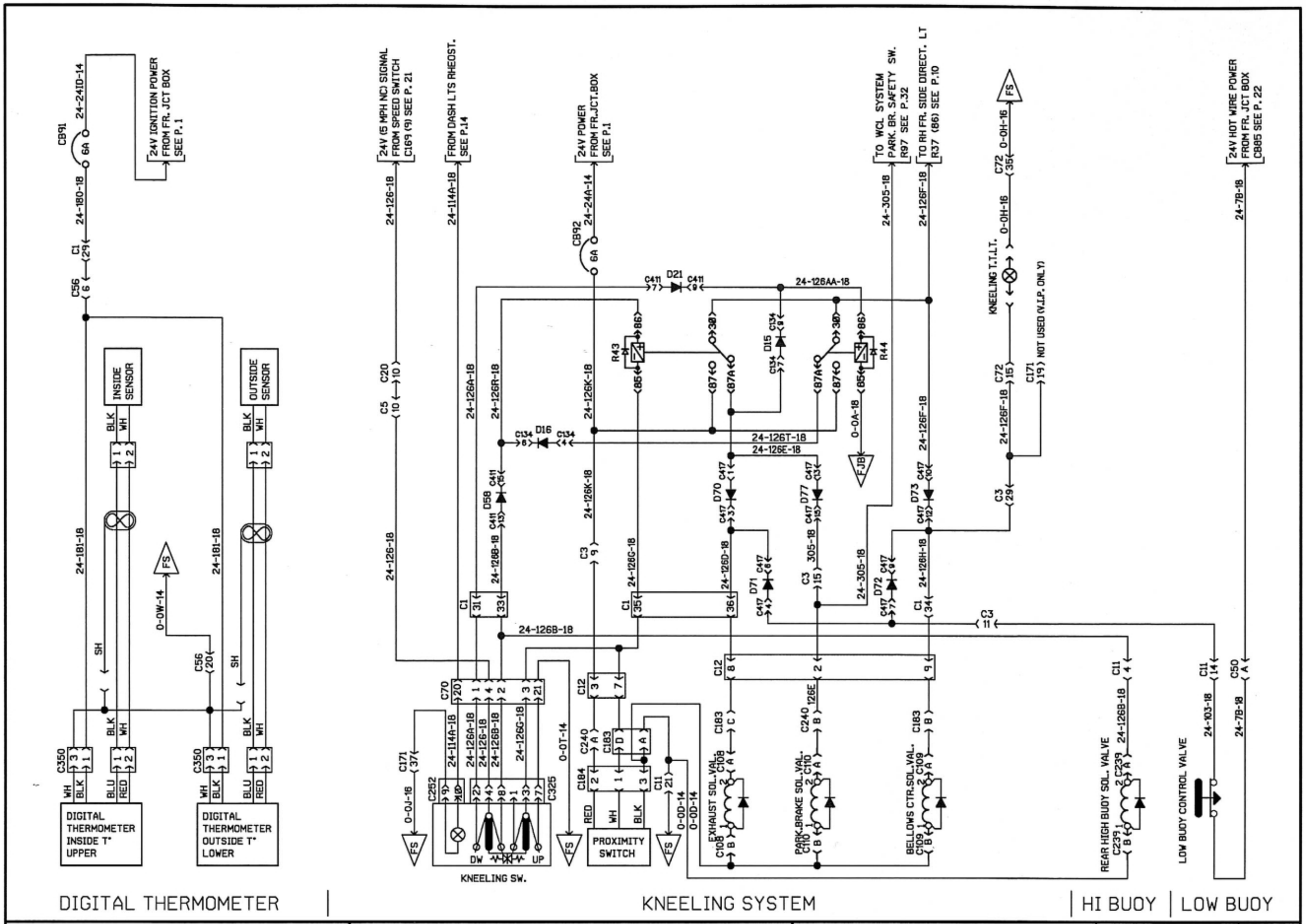

PREVOST CAR inc.	WIRING DIAGRAM	NO: D060869	P. 24 PRIOR	REVISION 000

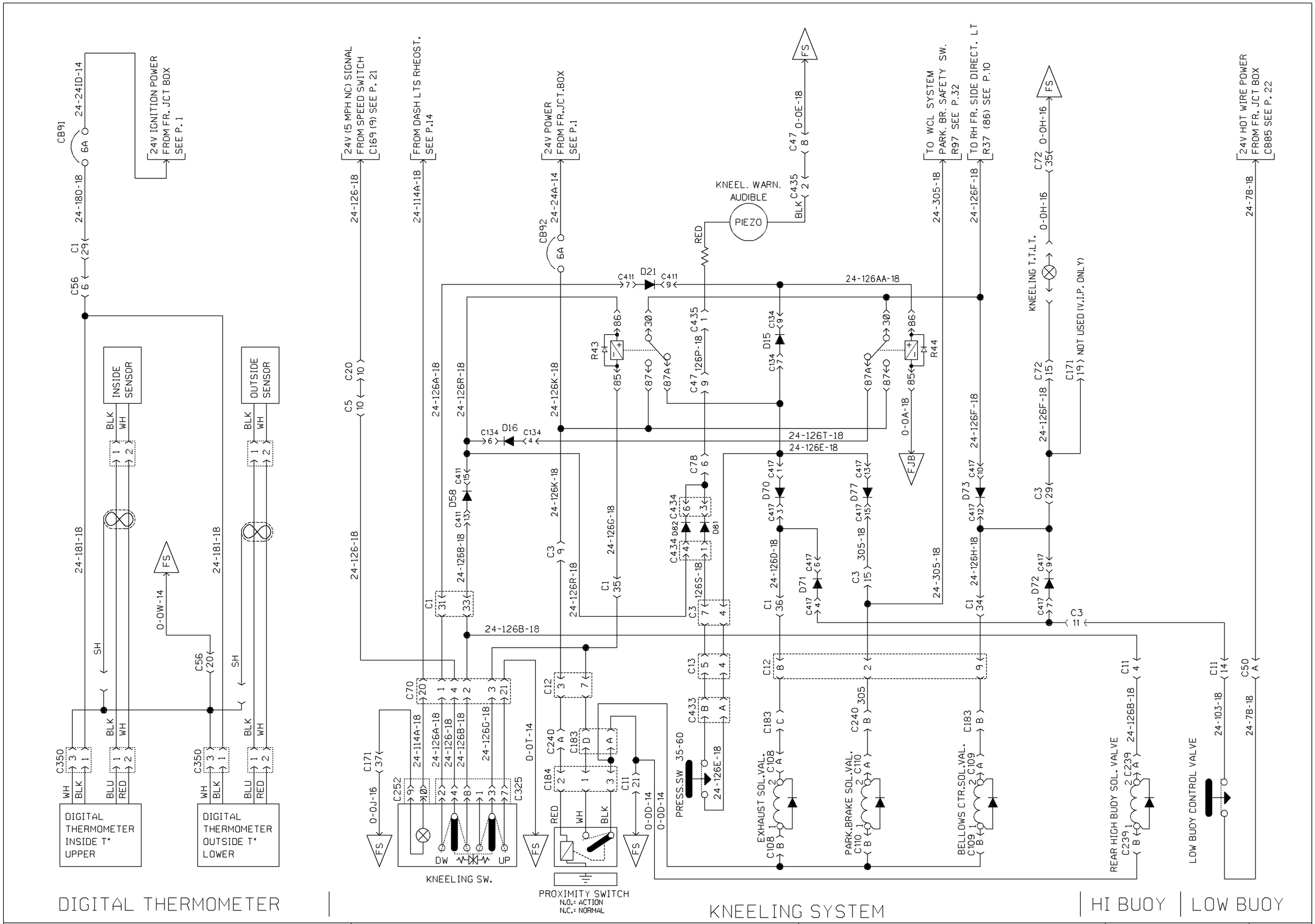

PREVOST CAR inc. | WIRING DIAGRAM | NO: D060869 | P. 24 | REVISION 005

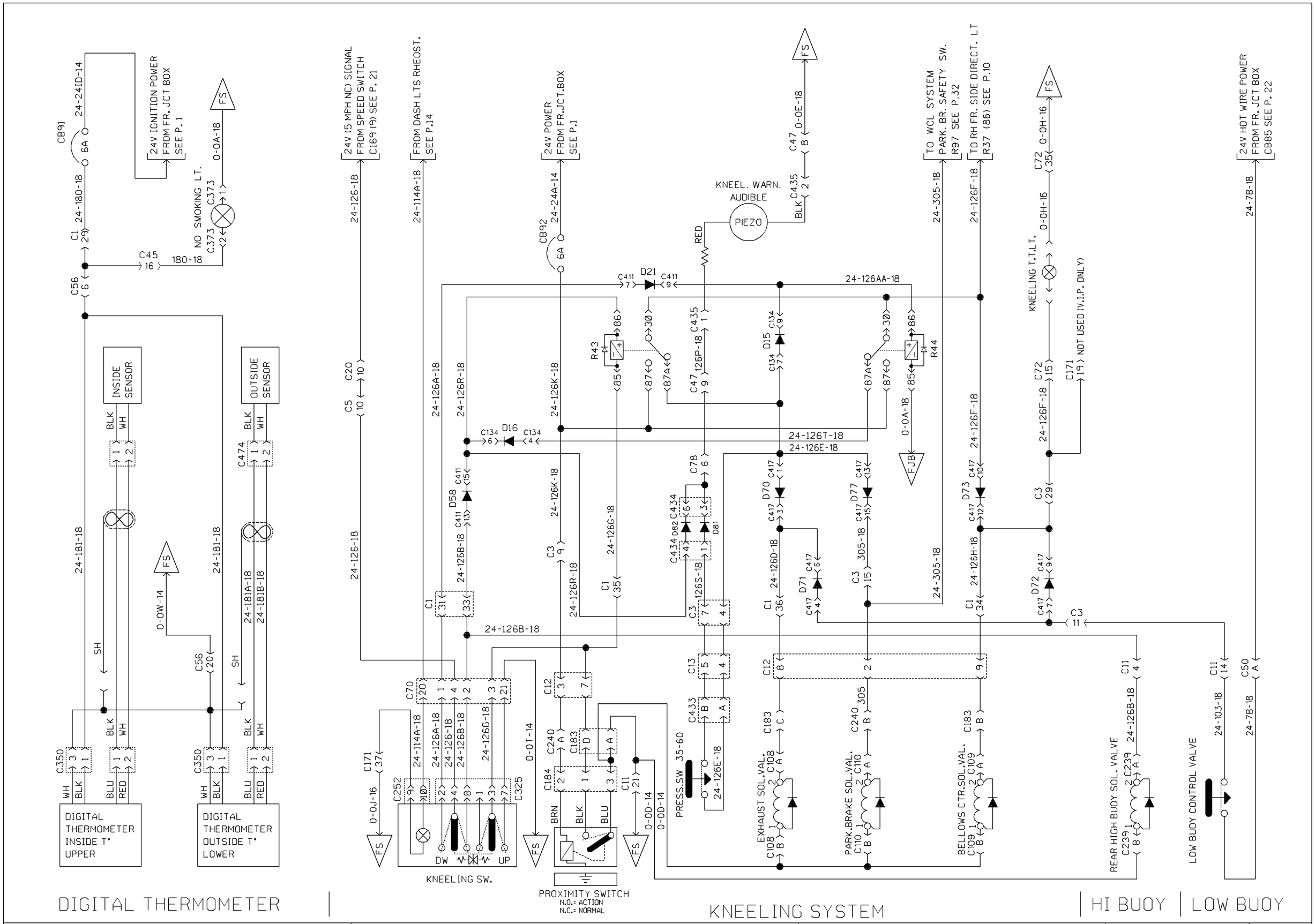

PREVOST CAR inc. | WIRING DIAGRAM | NO: D060869 | P. 24 | REVISION 027

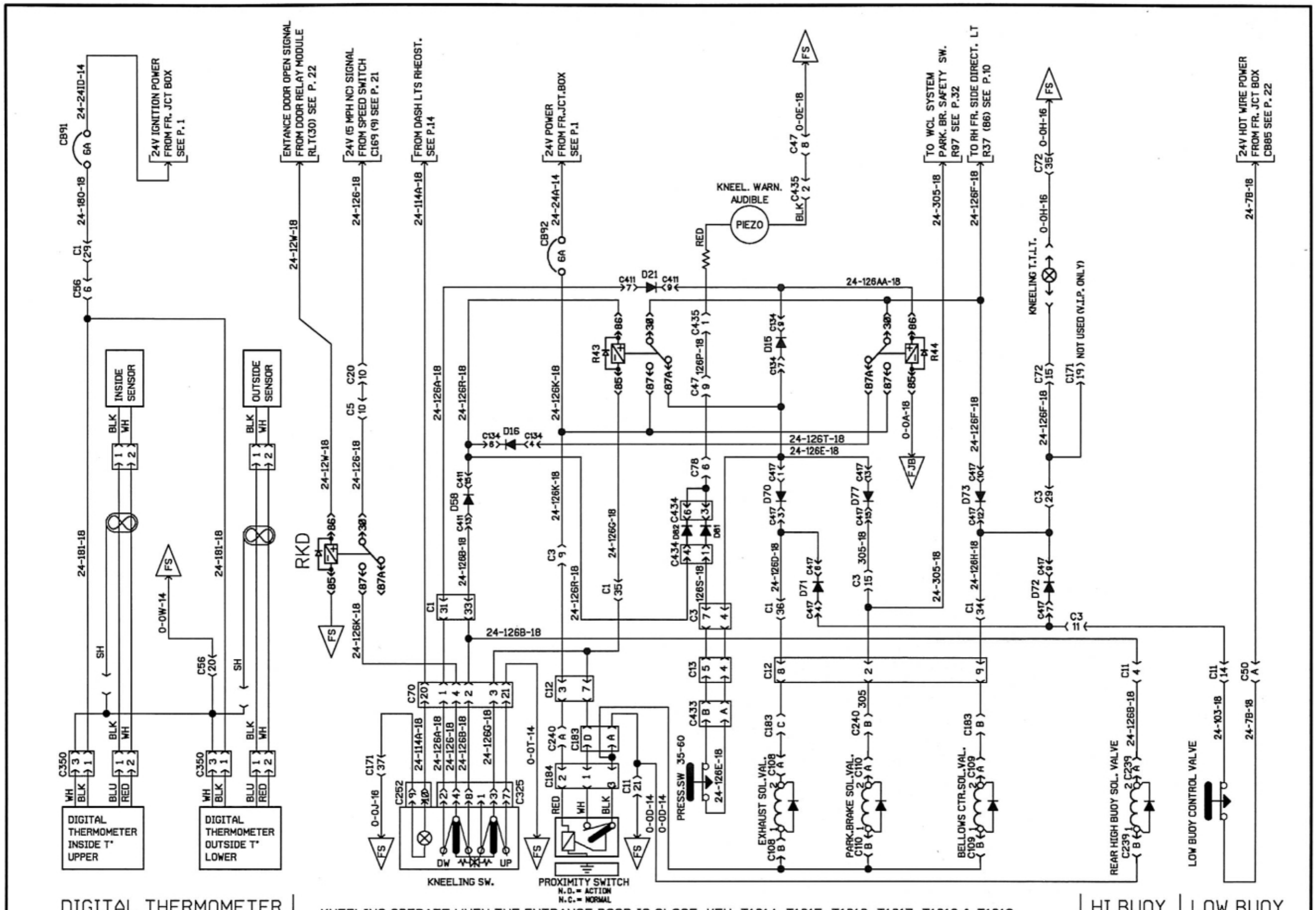

KNEELING OPERATE WHEN THE ENTRANCE DOOR IS CLOSE VEH. T1614, T1615, T1616, T1617, T1618 & T1619

PREVOST CAR inc.	WIRING DIAGRAM	NO: D060869	P. 24SP1	96/04/17

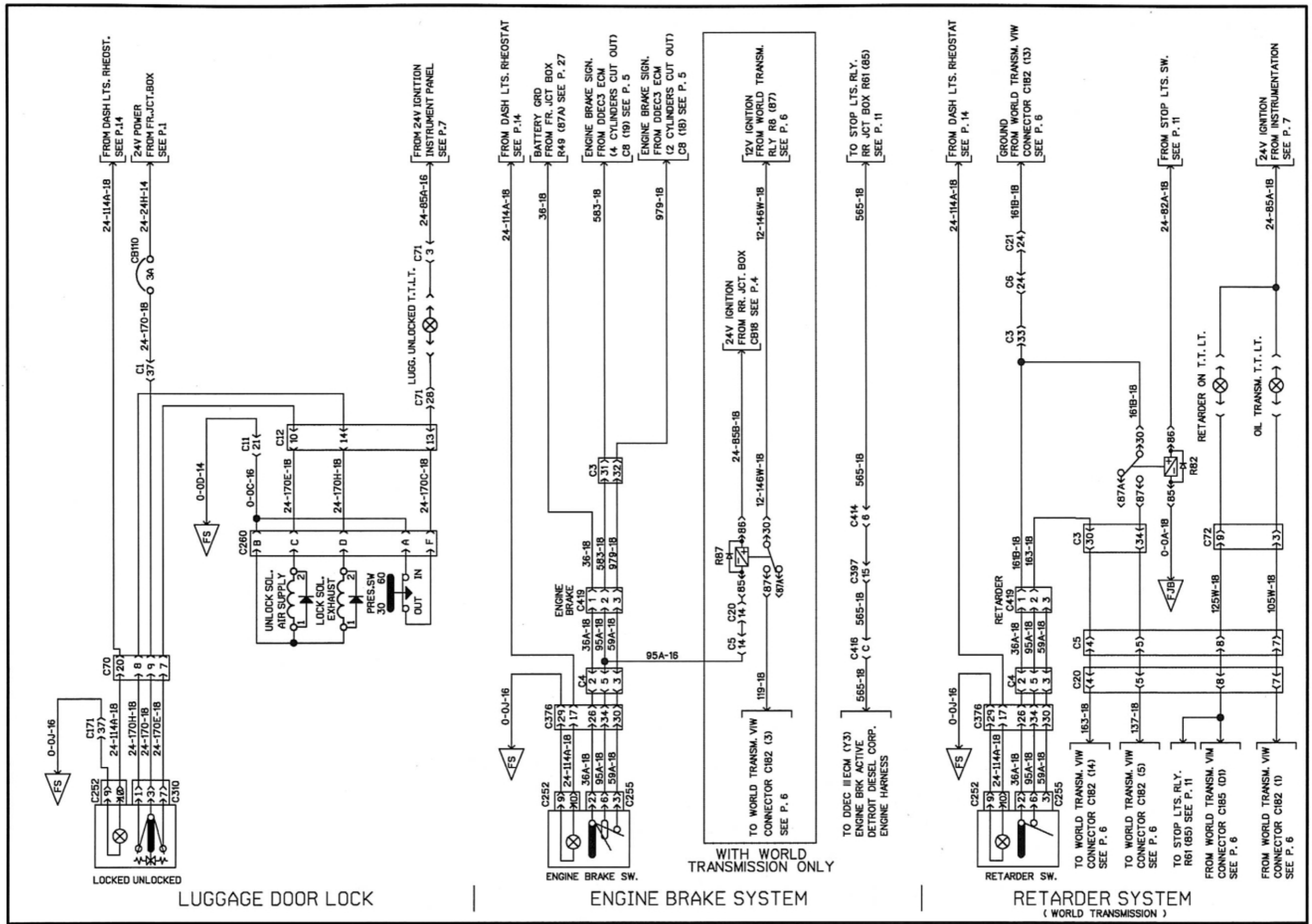

PREVOST CAR inc.	WIRING DIAGRAM	NO: D060869	P. 25 PRIOR	REVISION 000

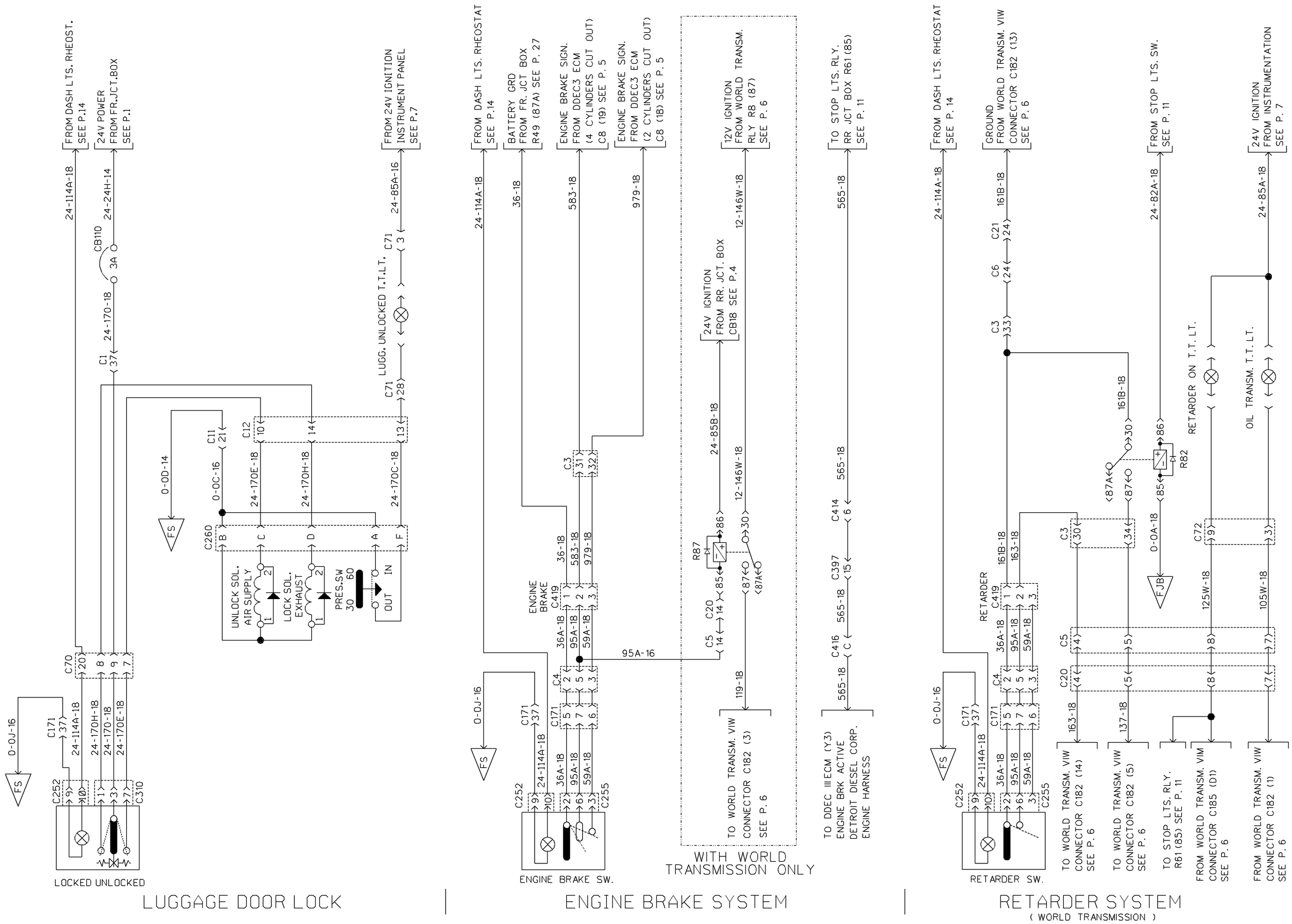

PREVOST CAR inc.	WIRING DIAGRAM	NO: D060869	P. 25 PRIOR	REVISION 002

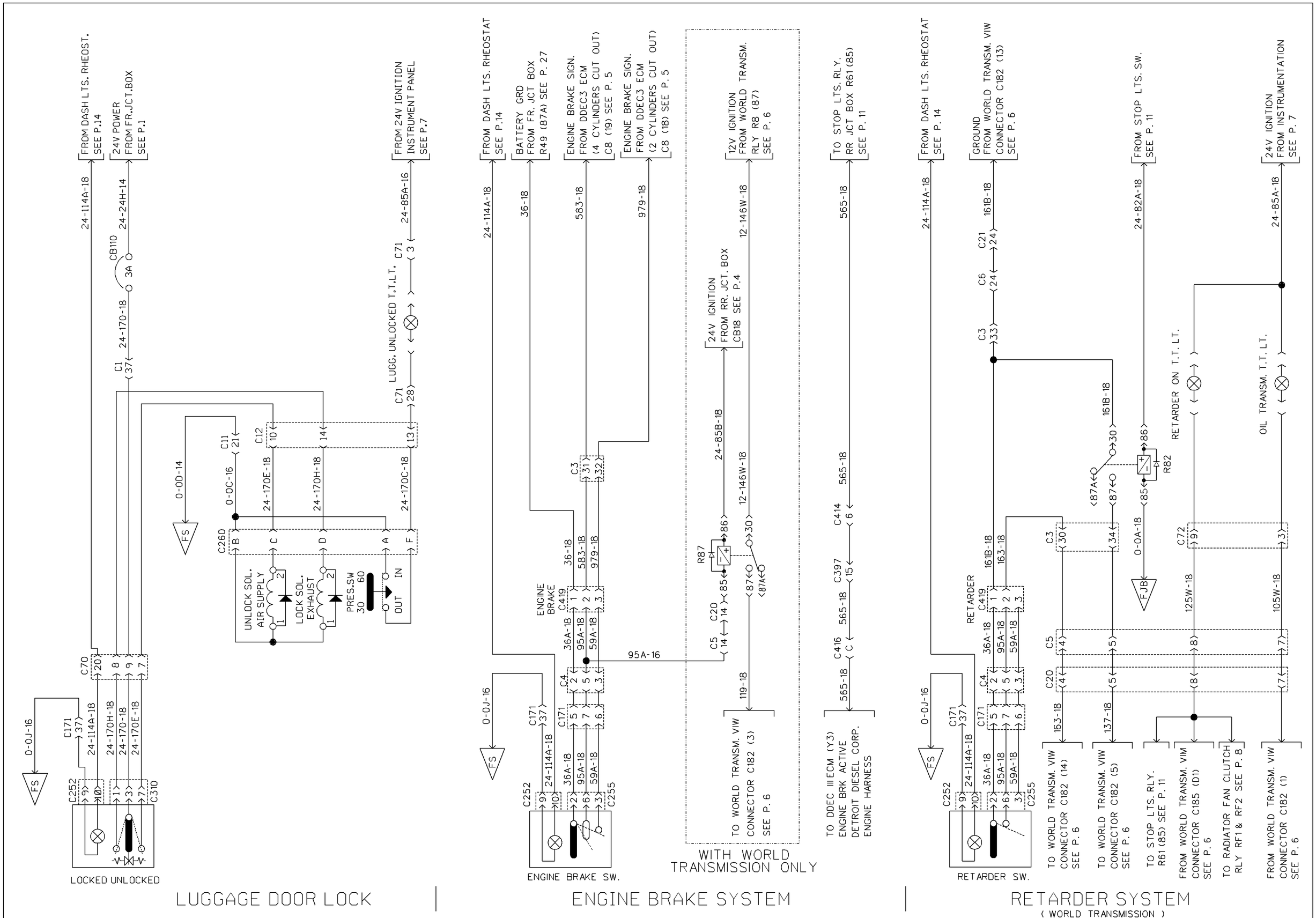

PREVOST CAR inc.	WIRING DIAGRAM	NO: D060869	P. 25	REVISION 008

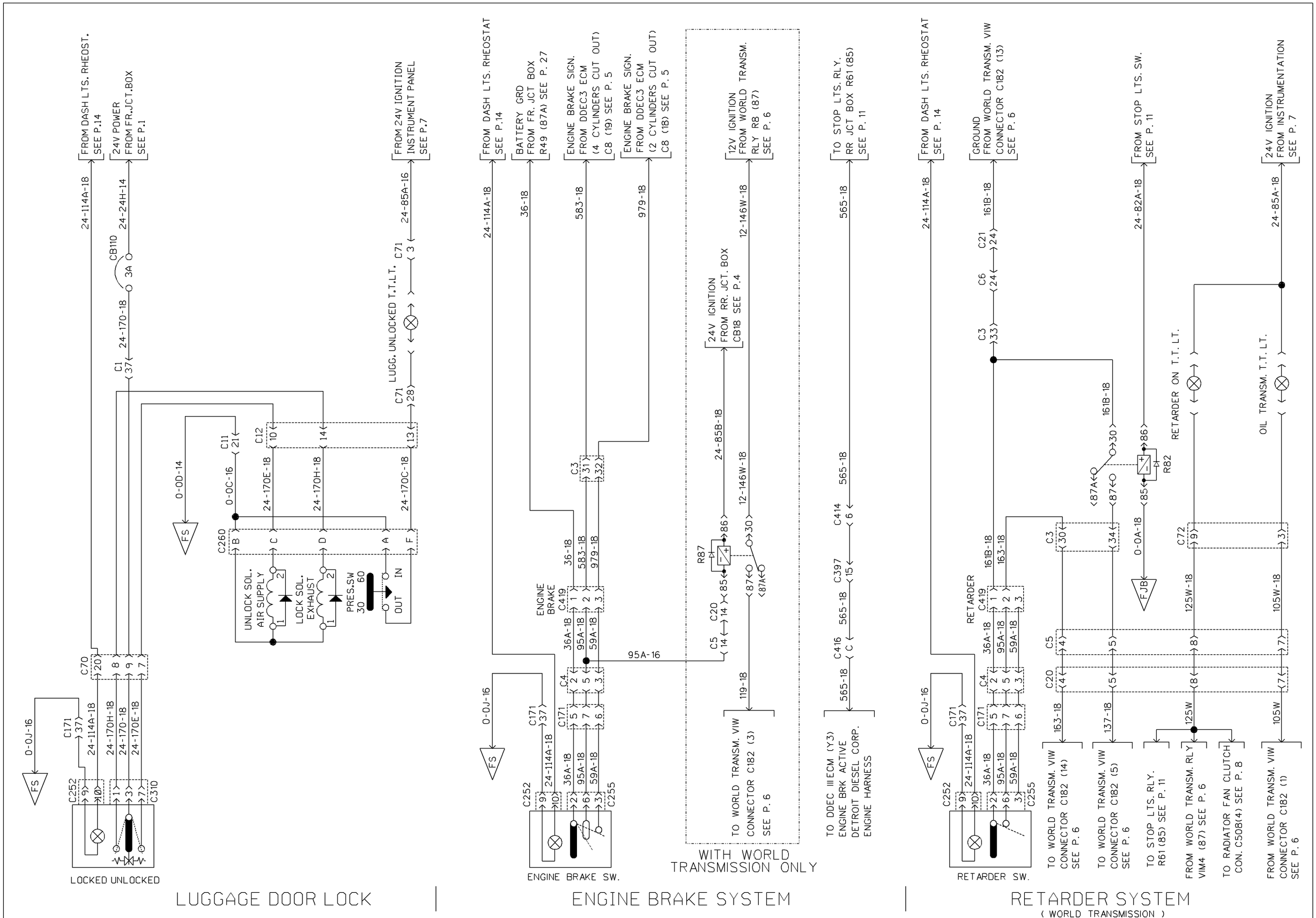

PREVOST CAR inc.	WIRING DIAGRAM	NO: D060869	P. 25	REVISION 021

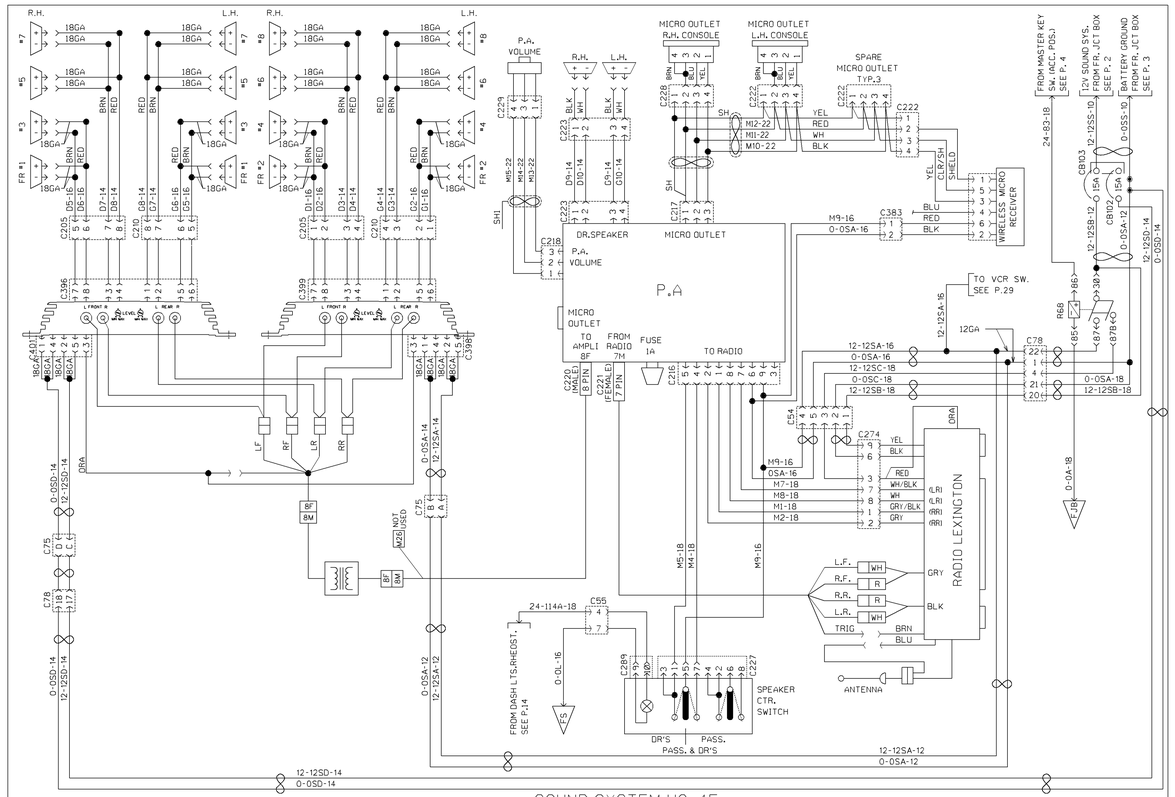

SOUND SYSTEM H3-45

PREVOST CAR inc.	WIRING DIAGRAM	NO: D060869	P. 26 1/2	REVISION 000

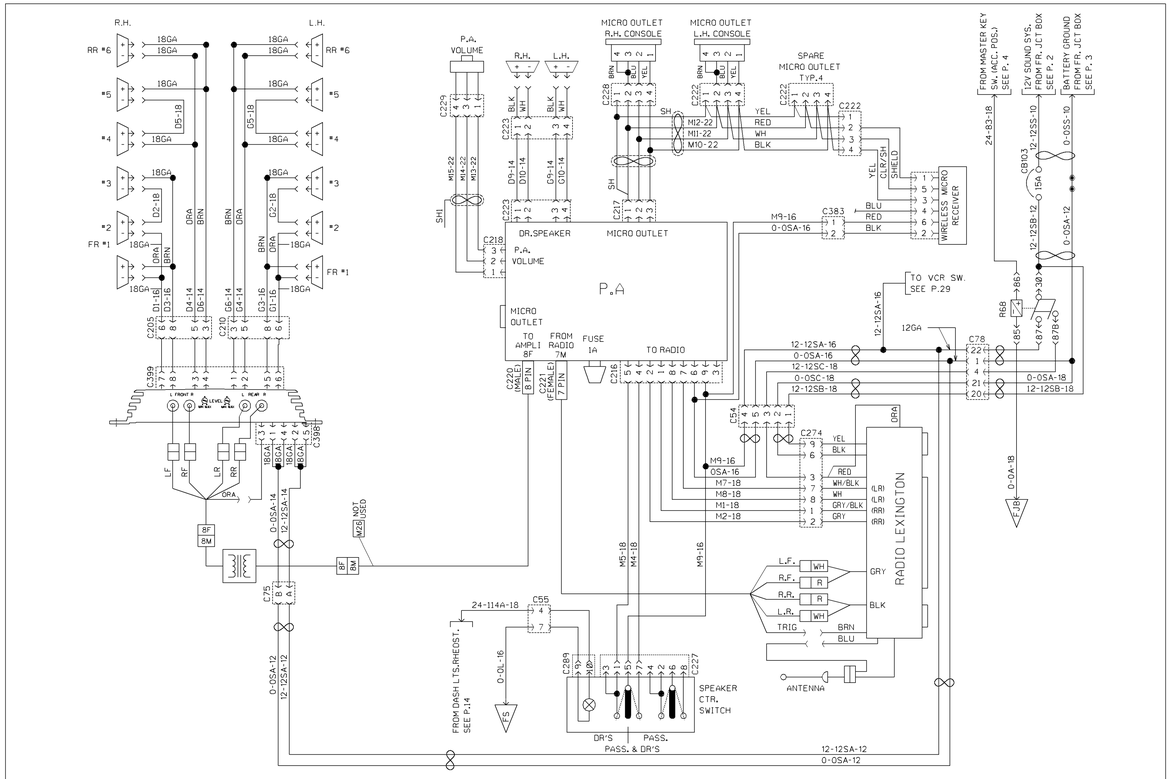

SOUND SYSTEM H3-41

PREVOST CAR inc.	WIRING DIAGRAM	NO: D060869	P. 26 2/2	REVISION 000

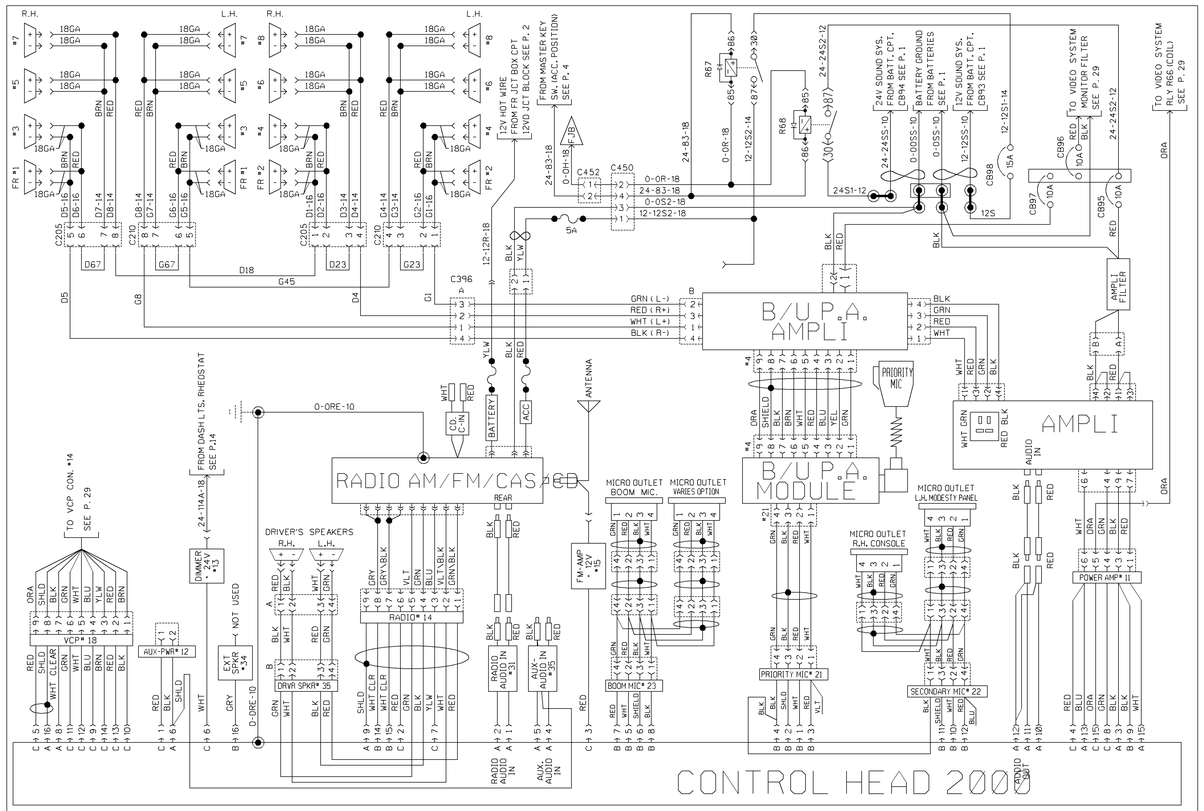

SOUND SYSTEM H3-45

PREVOST CAR inc.	WIRING DIAGRAM	NO: D060869	P. 26 1/2	REVISION 027

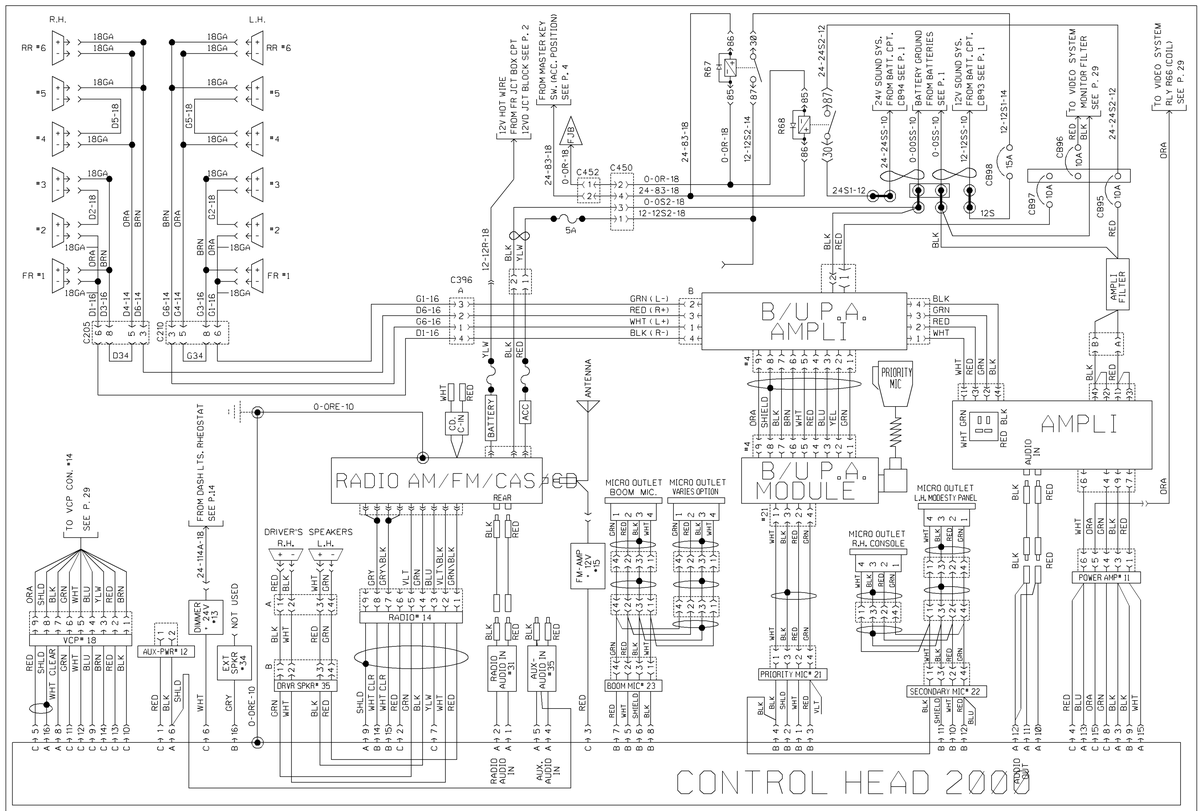

SOUND SYSTEM H3-41

PREVOST CAR inc.	WIRING DIAGRAM	NO: D060869	P. 26 2/2	REVISION 017

SOUND SYSTEM H3-45

SOUND SYSTEM H3-41

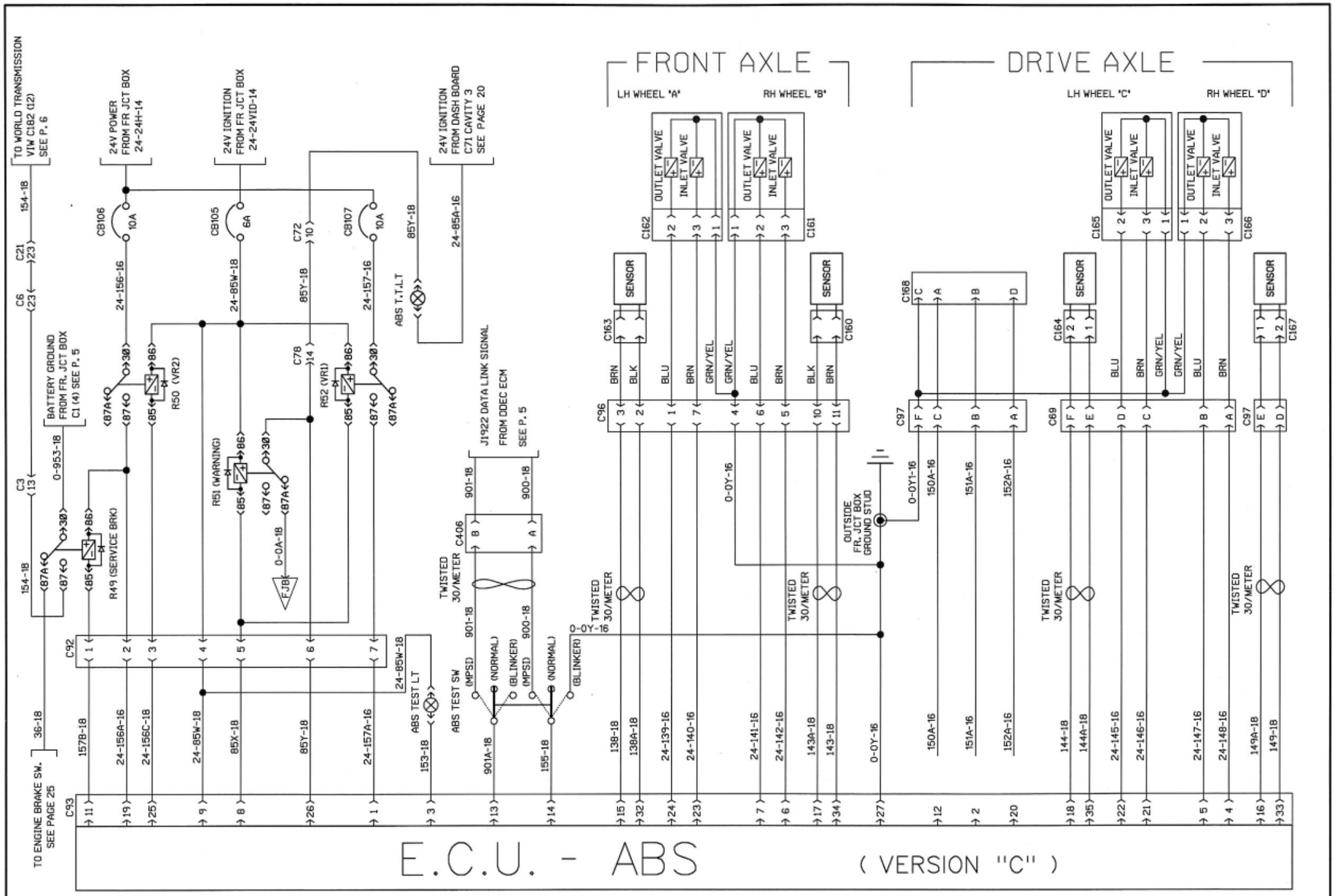

PREVOST CAR inc.	WIRING DIAGRAM	NO: D060869	P. 27	REVISION 000

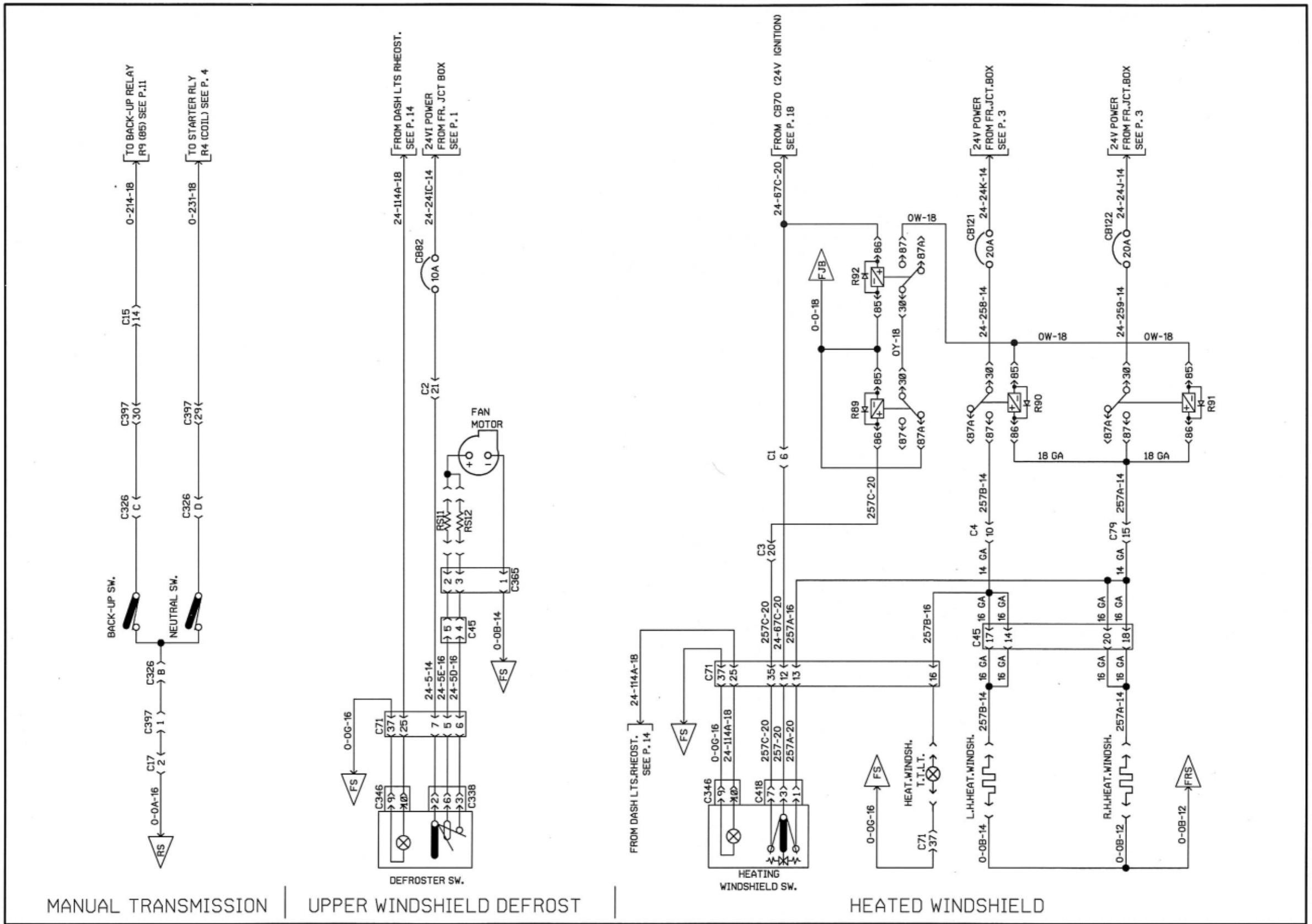

MANUAL TRANSMISSION | UPPER WINDSHIELD DEFROST | HEATED WINDSHIELD

PREVOST CAR inc.	WIRING DIAGRAM	NO: D060869	P. 28	REVISION 000

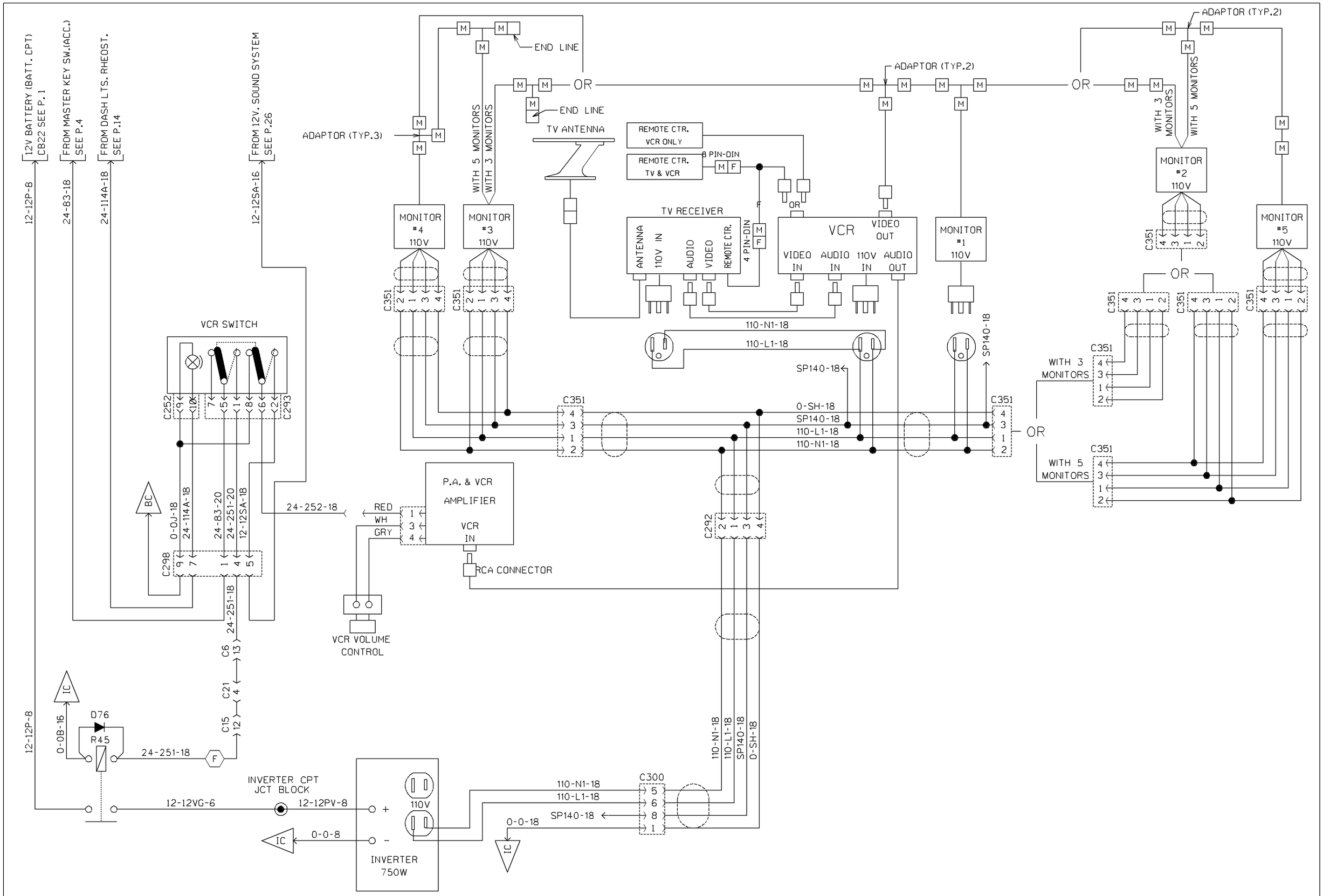

VIDEO SYSTEM & TV RECEIVER

PREVOST CAR inc.	WIRING DIAGRAM	NO: D060869	P. 29	REVISION 009

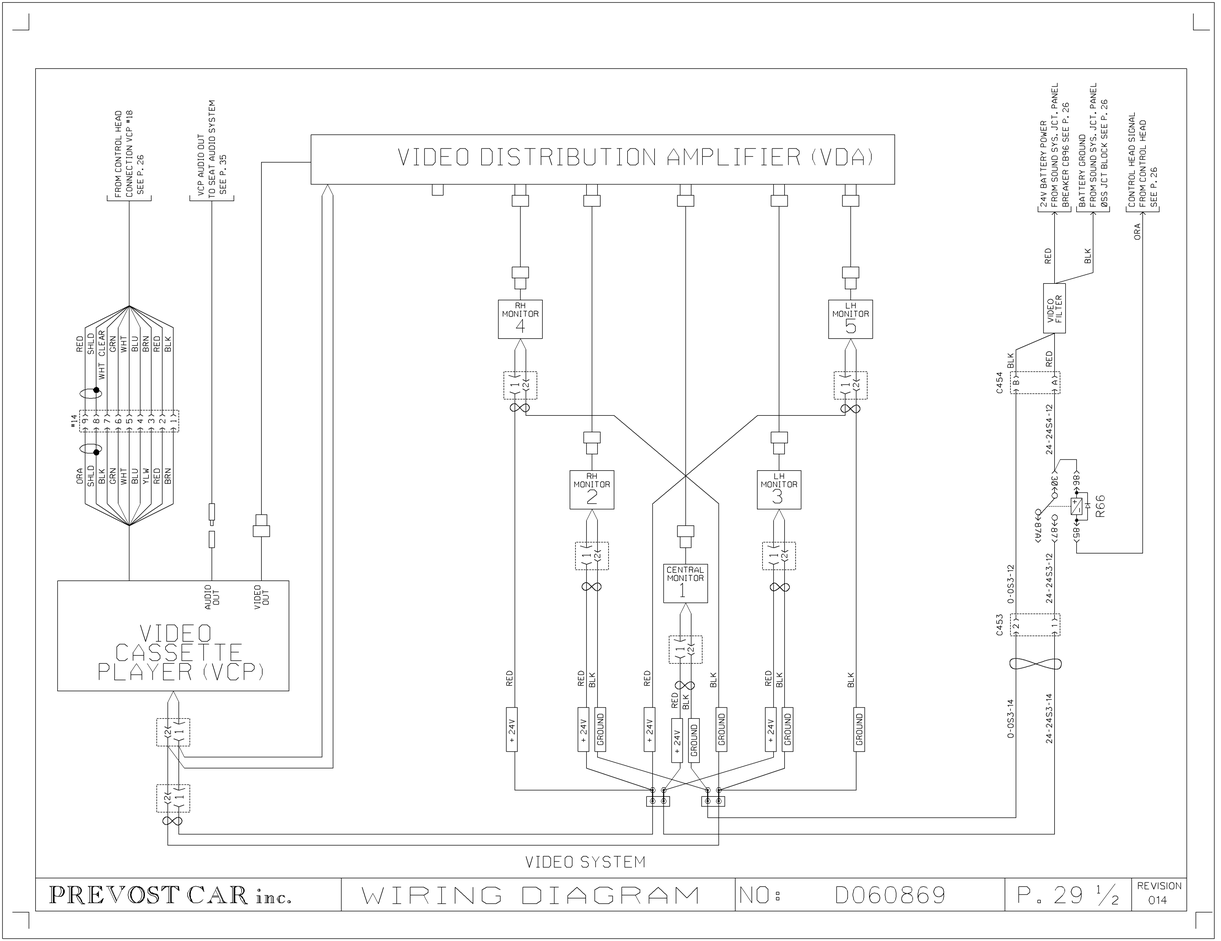

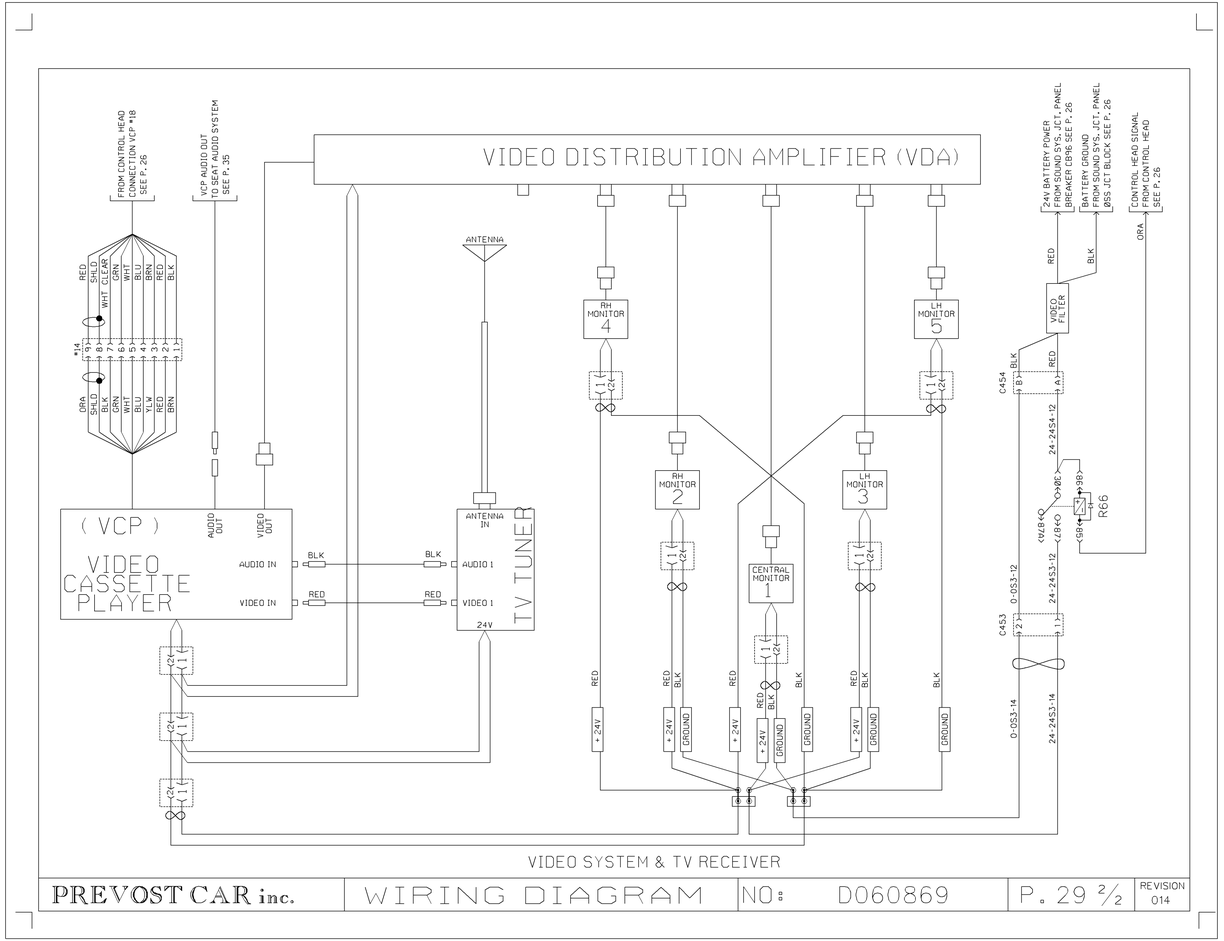

VIDEO SYSTEM

VIDEO SYSTEM & TV RECEIVER

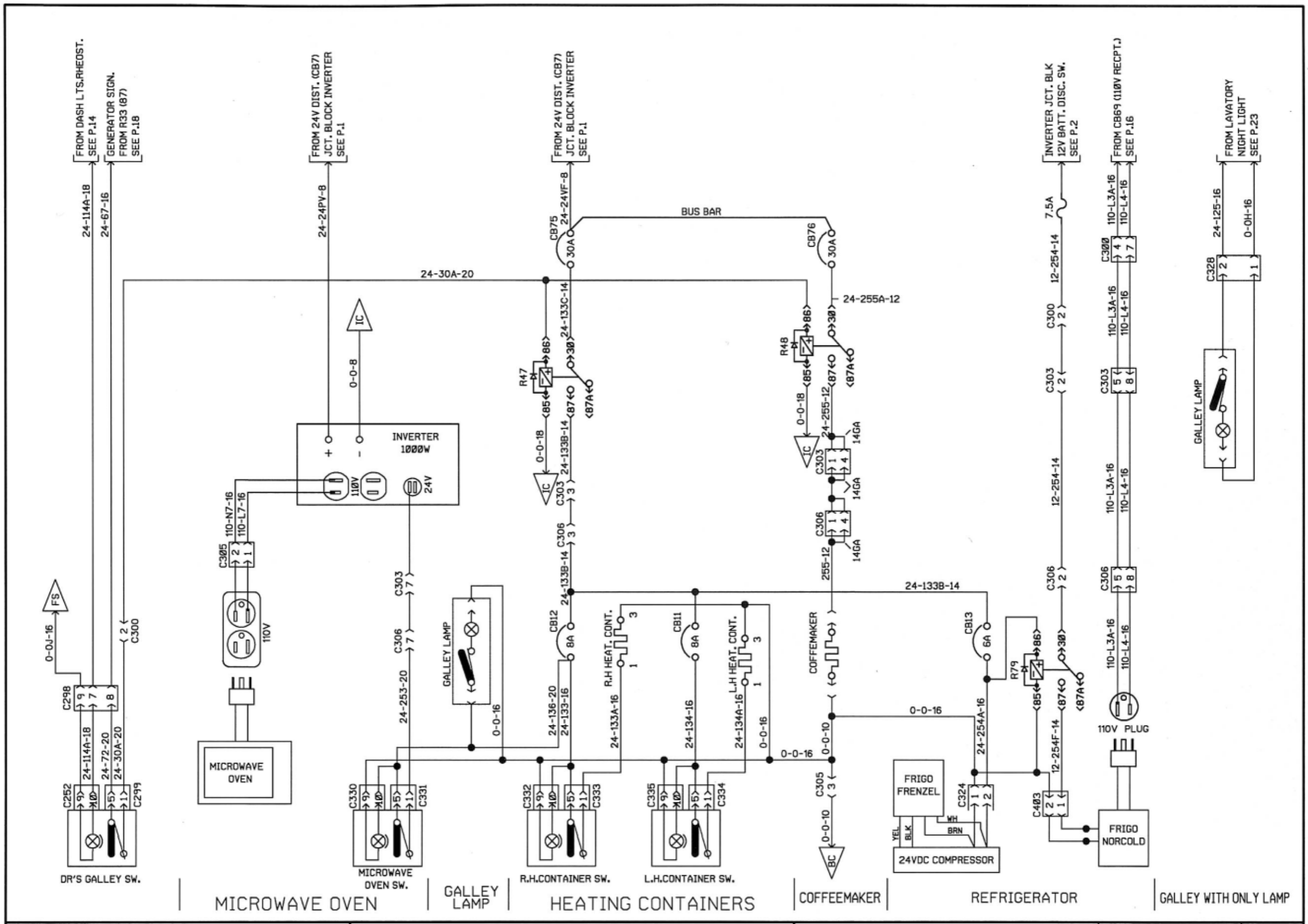

PREVOST CAR inc.	WIRING DIAGRAM	NO: D060869	P. 30	REVISION 017

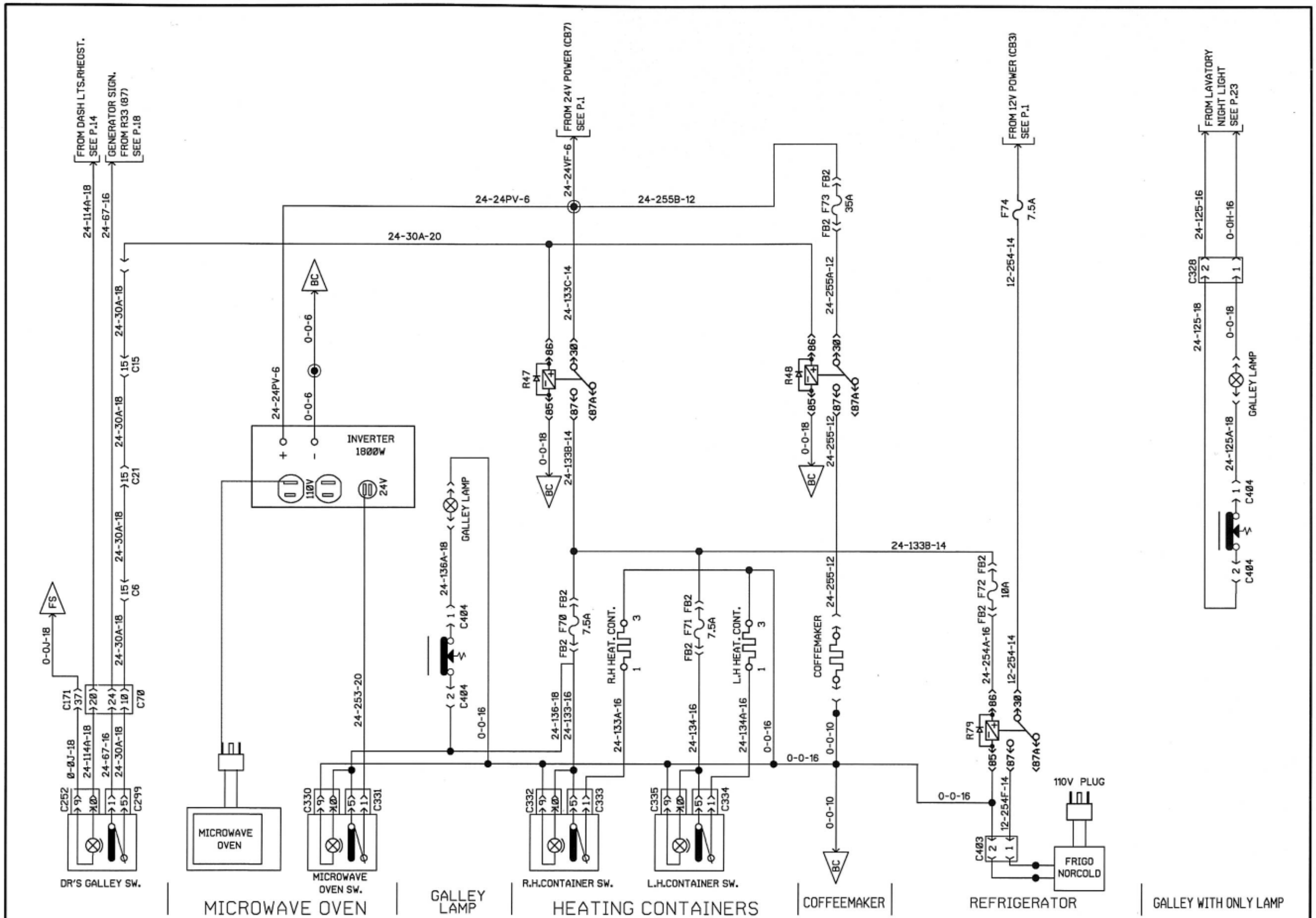

PREVOST CAR inc.	WIRING DIAGRAM	NO: D060869	P. 30	REVISION 028

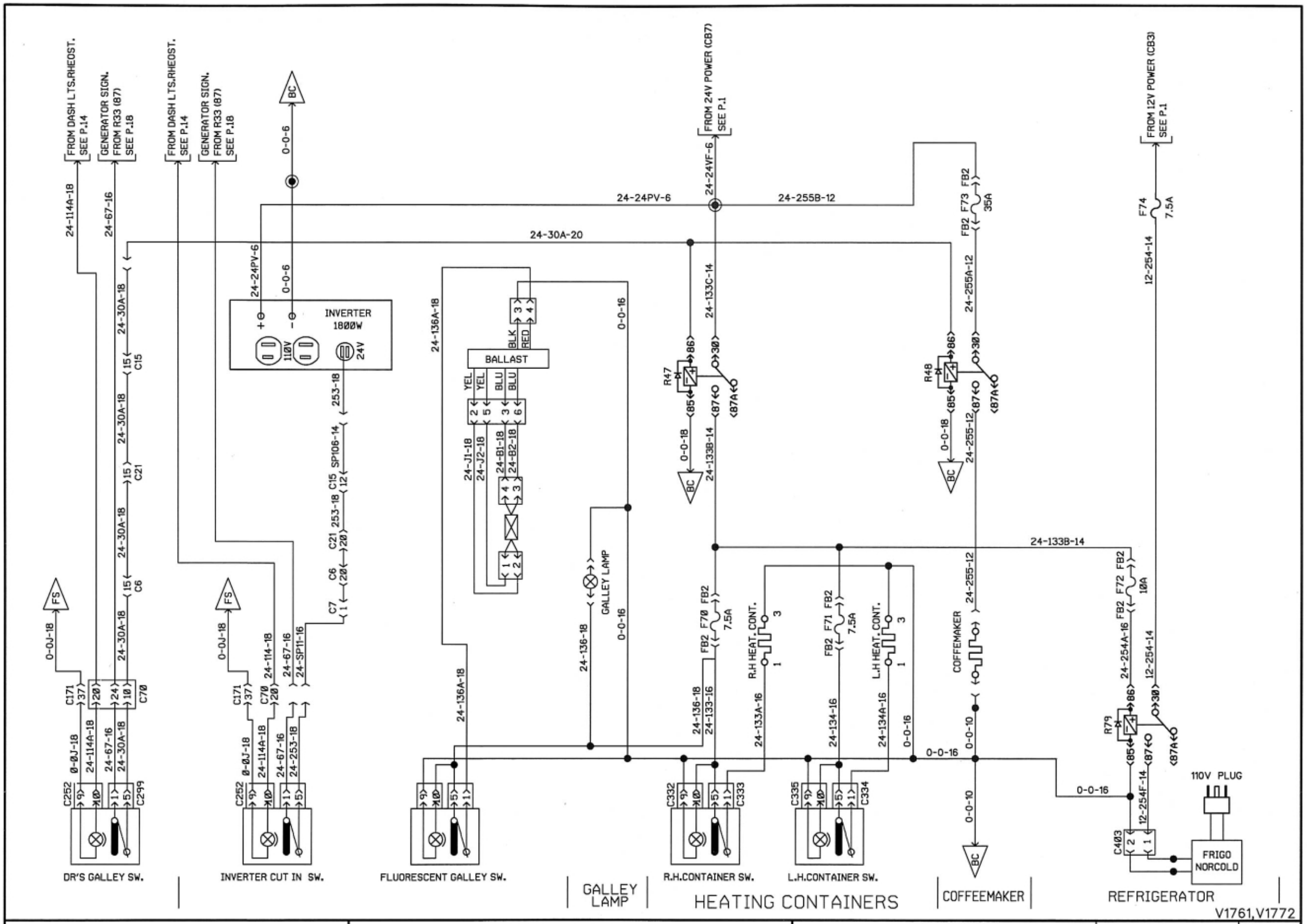

PREVOST CAR inc.	WIRING DIAGRAM	NO: D060869	P.30sp1	REVISION 000

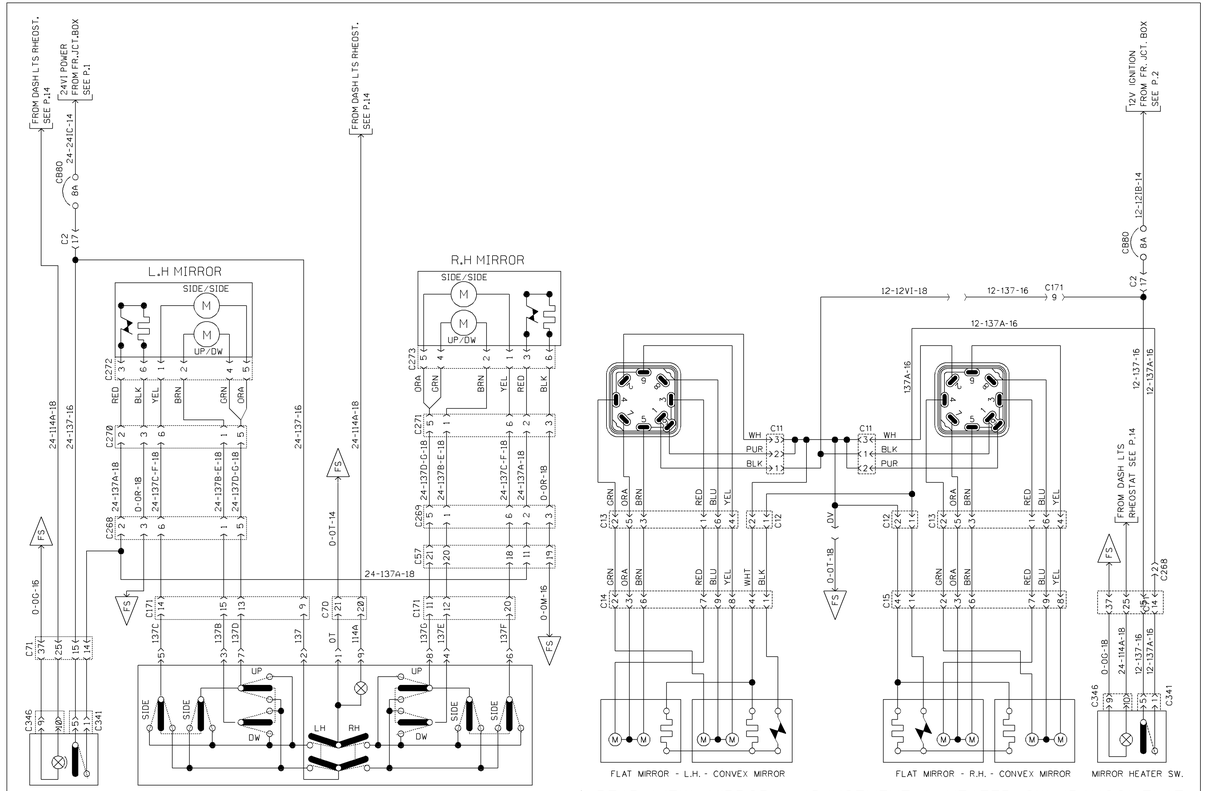

REAR VIEW - ADJUSTMENT & HEATED SW. (SPARTAN)

REAR VIEW MIRROR - ADJUSTMENT & HEATER SW. (RAMCO) FLAT & CONVEX

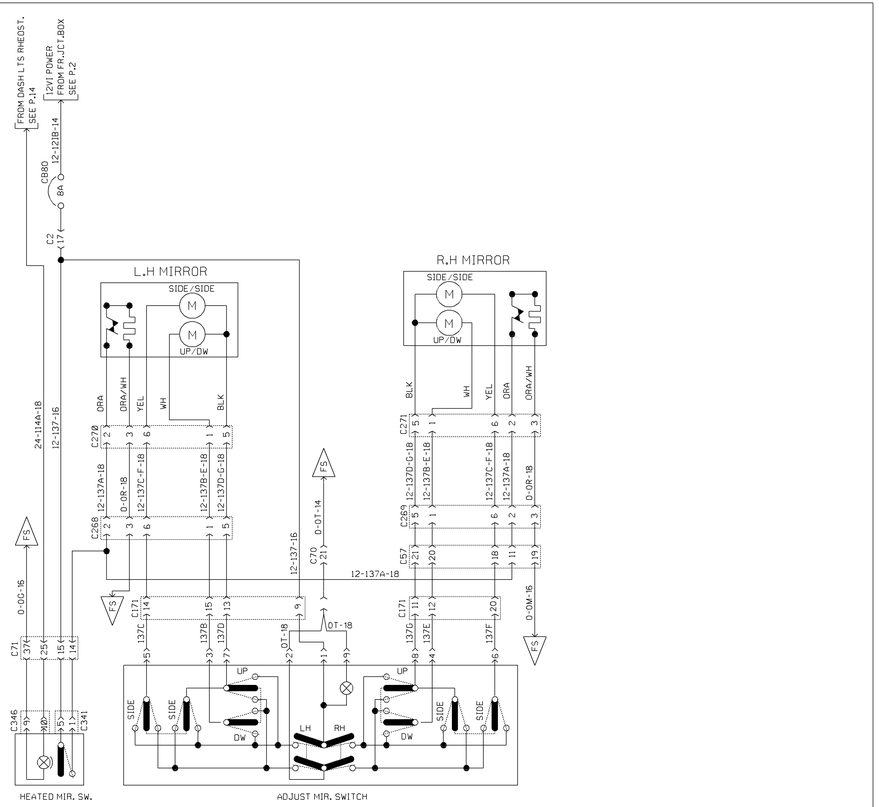

REAR VIEW - ADJUSTMENT & HEATED SW. (RAMCO FLAT)

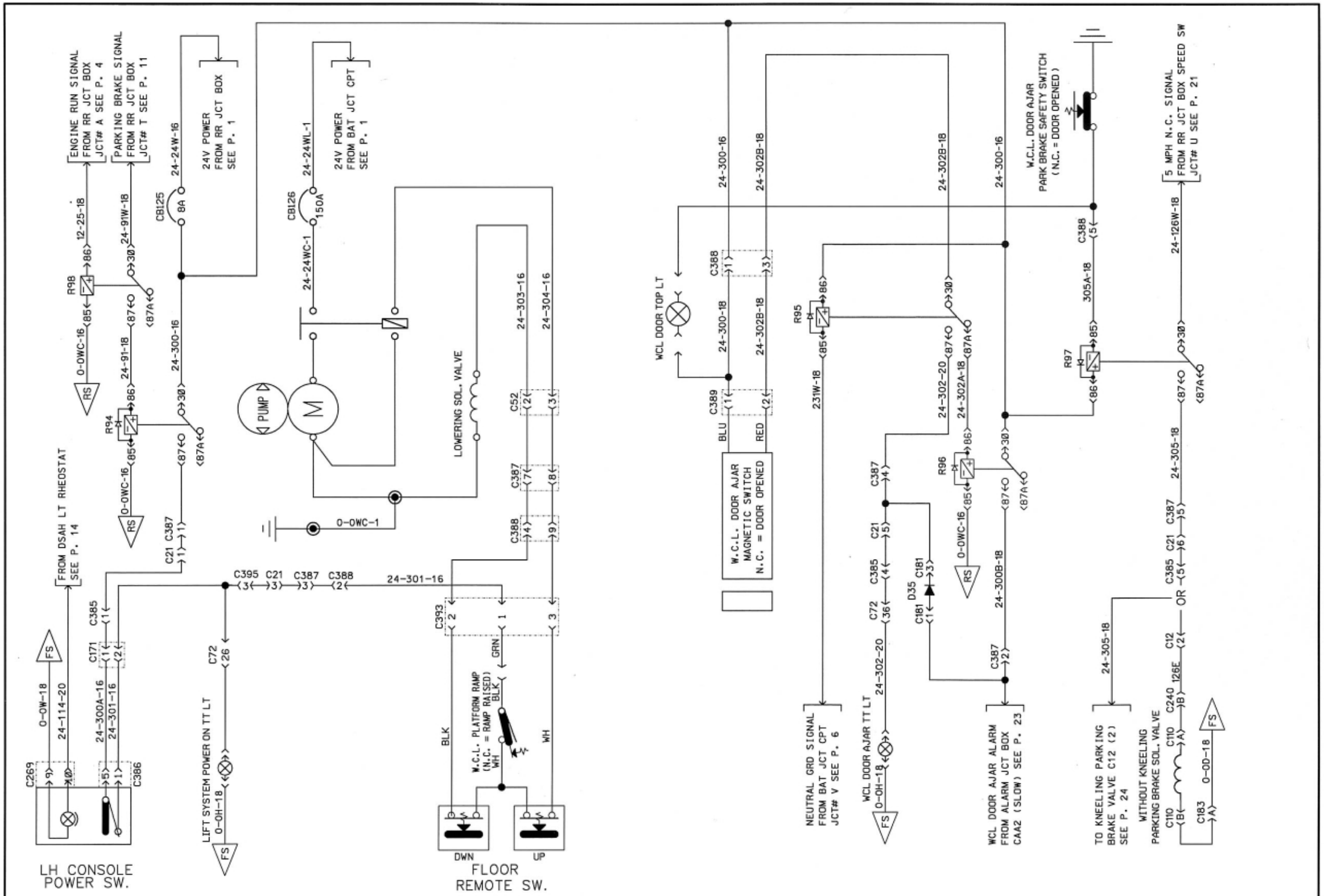

W.C.L. SYSTEM

PREVOST CAR inc.	WIRING DIAGRAM	NO: D060869	P. 32	REVISION 000

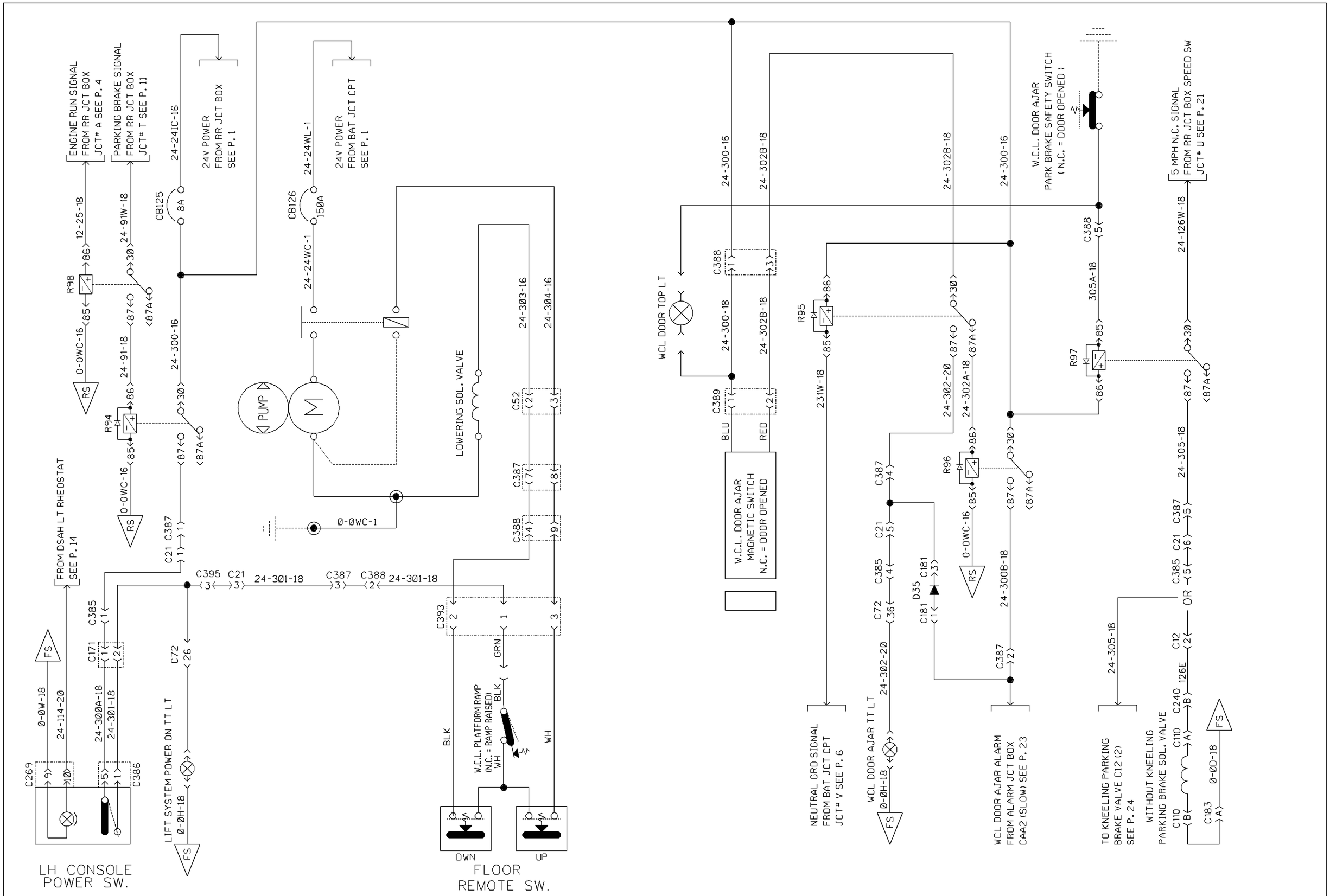

W.C.L. SYSTEM STEWART & STEVENSON

PREVOST CAR inc.	WIRING DIAGRAM	NO: D060869	P. 32	REVISION 021

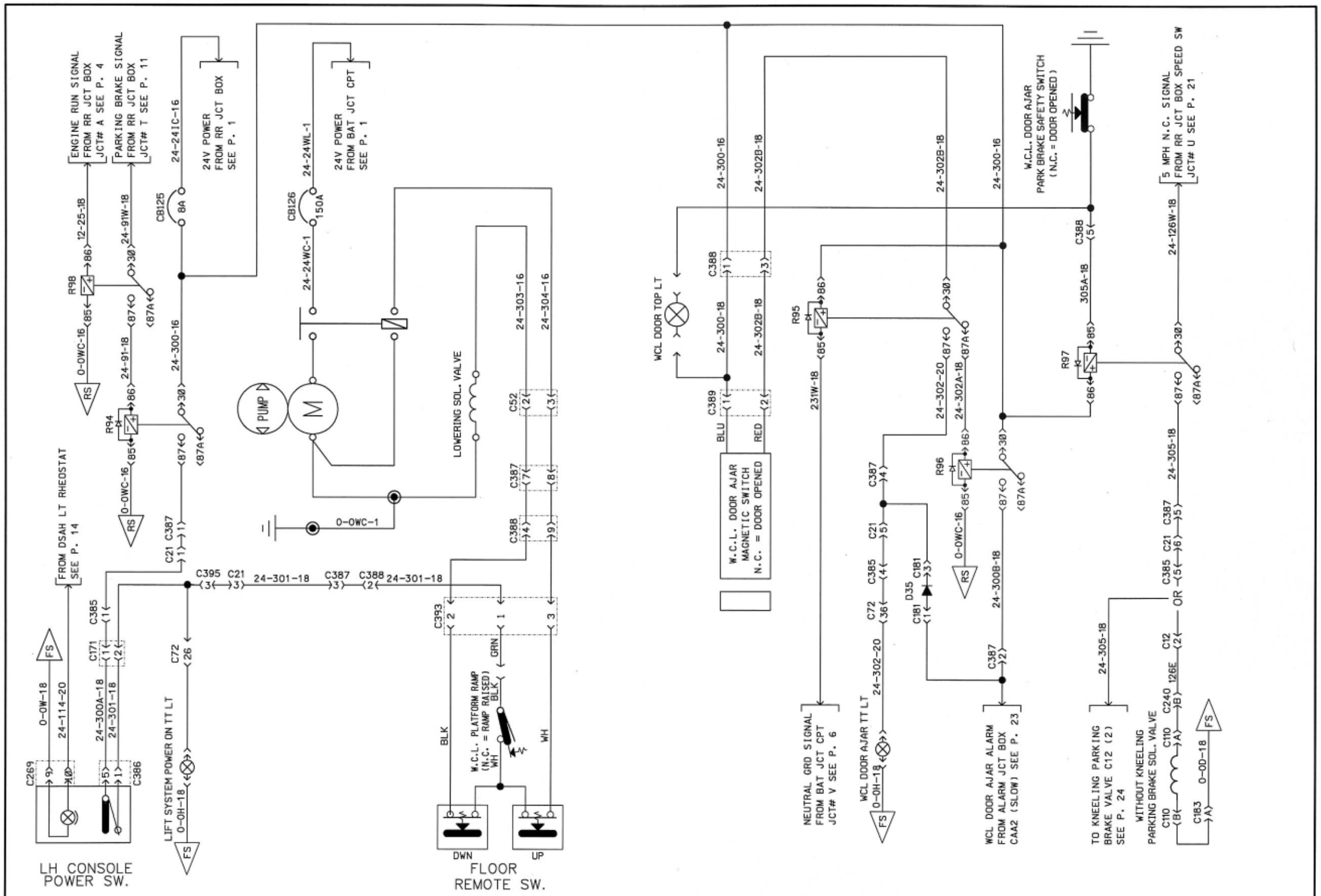

W.C.L. SYSTEM STEWART & STEVENSON

PREVOST CAR inc.	WIRING DIAGRAM	NO: D060869	P. 32	REVISION 021

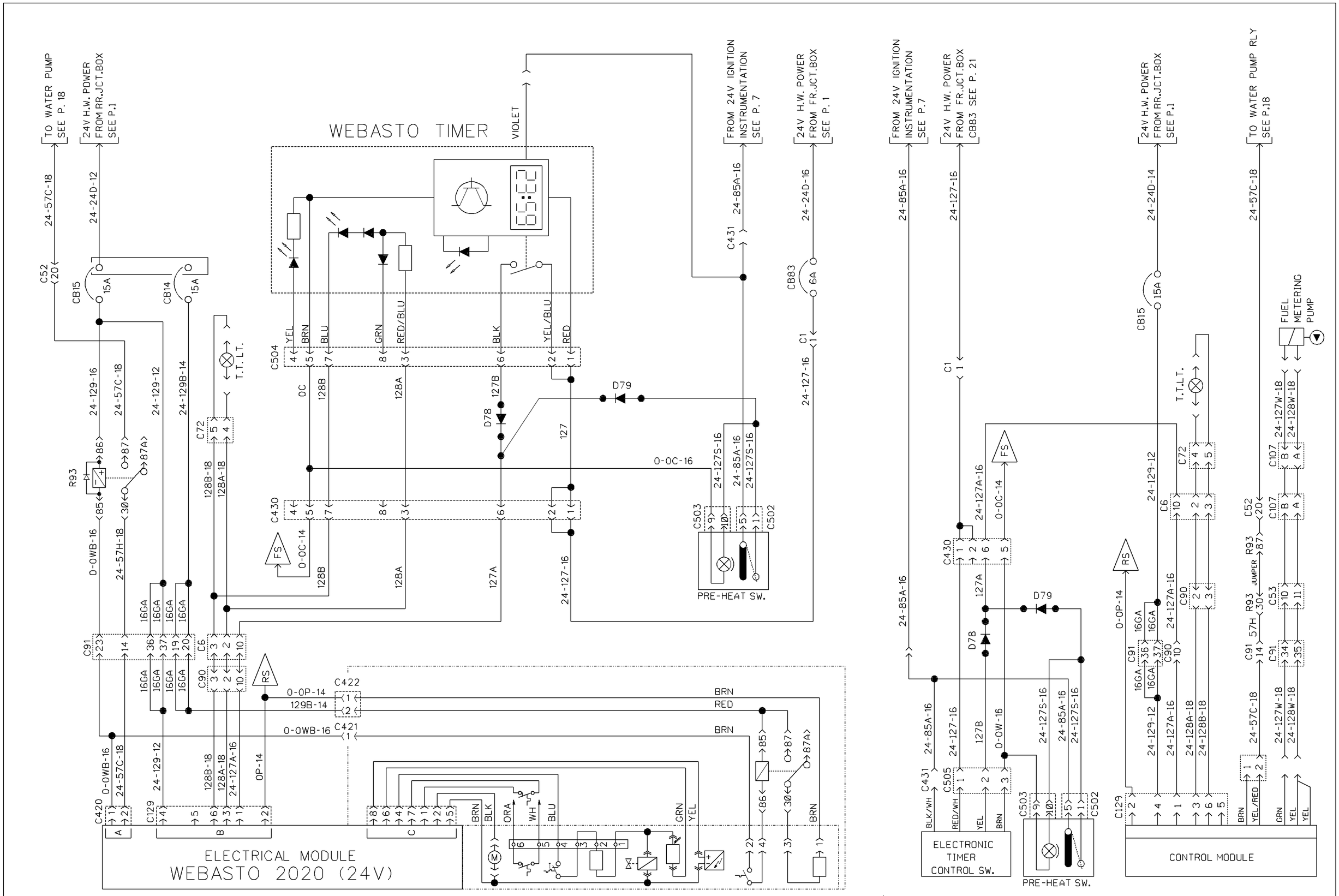

PREVOST CAR inc.	WIRING DIAGRAM	NO: D060869	P. 33	REVISION 011

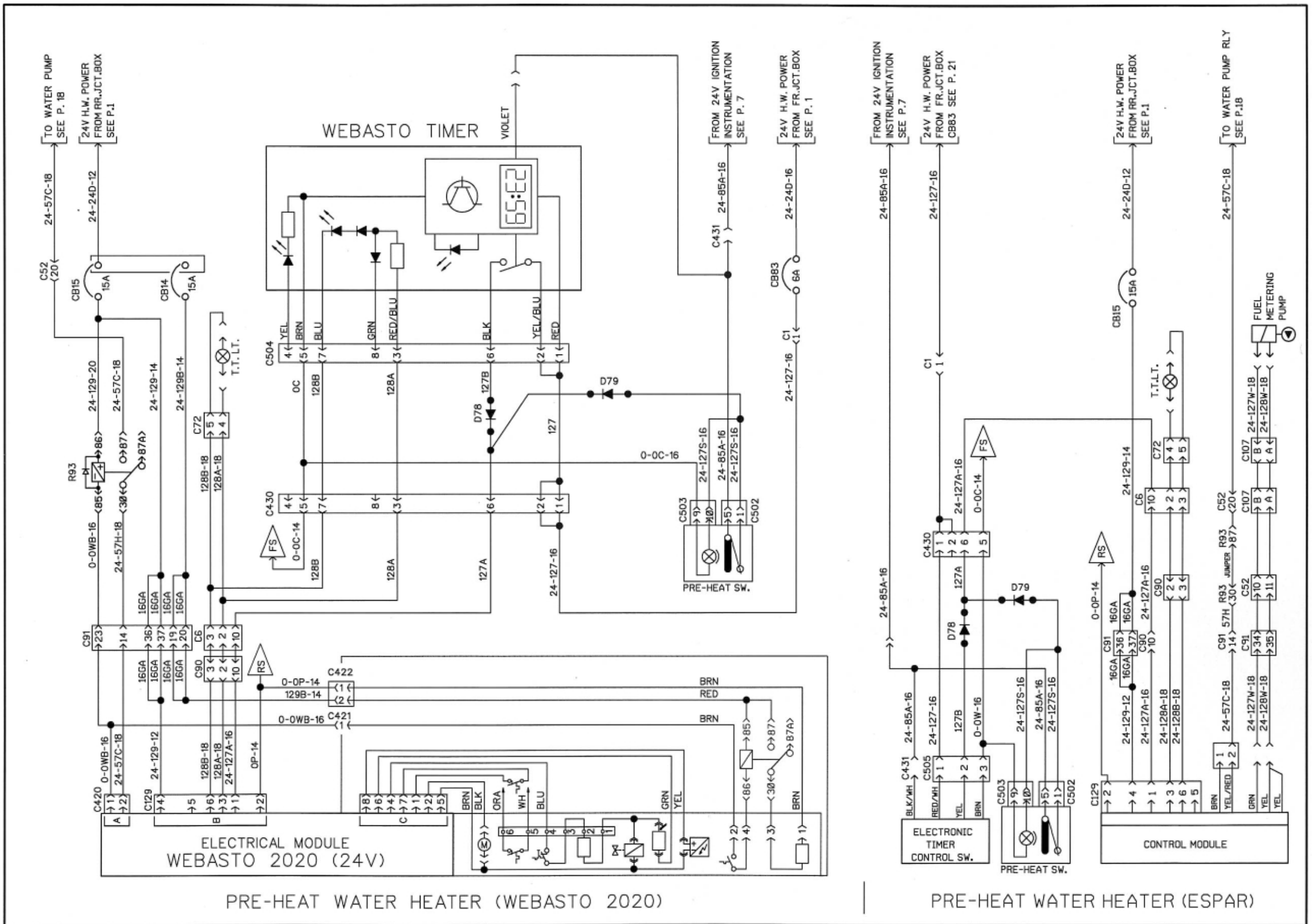

PREVOST CAR inc.	WIRING DIAGRAM	NO: D060869	P. 33	REVISION 021

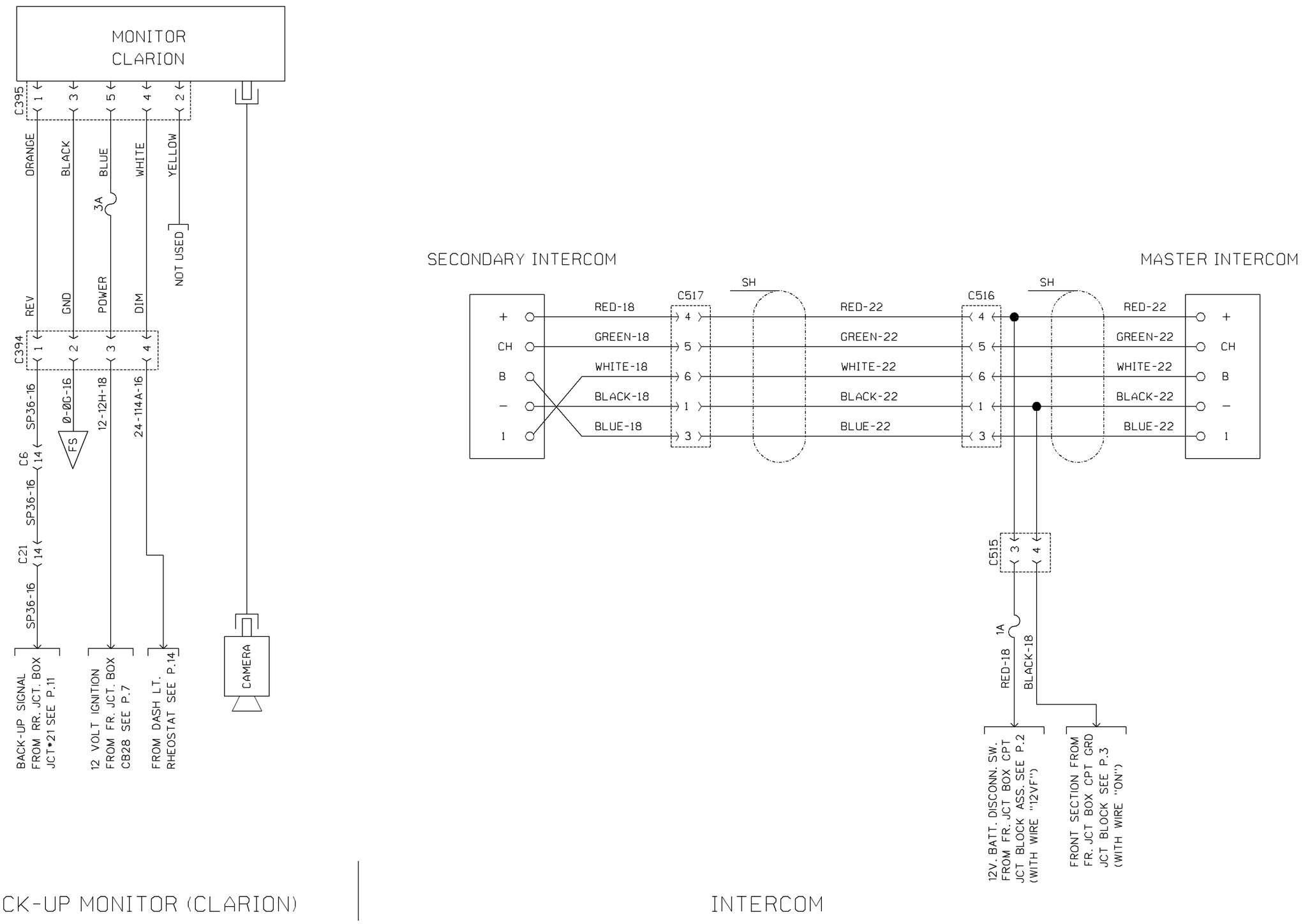

BACK-UP MONITOR (CLARION)

INTERCOM

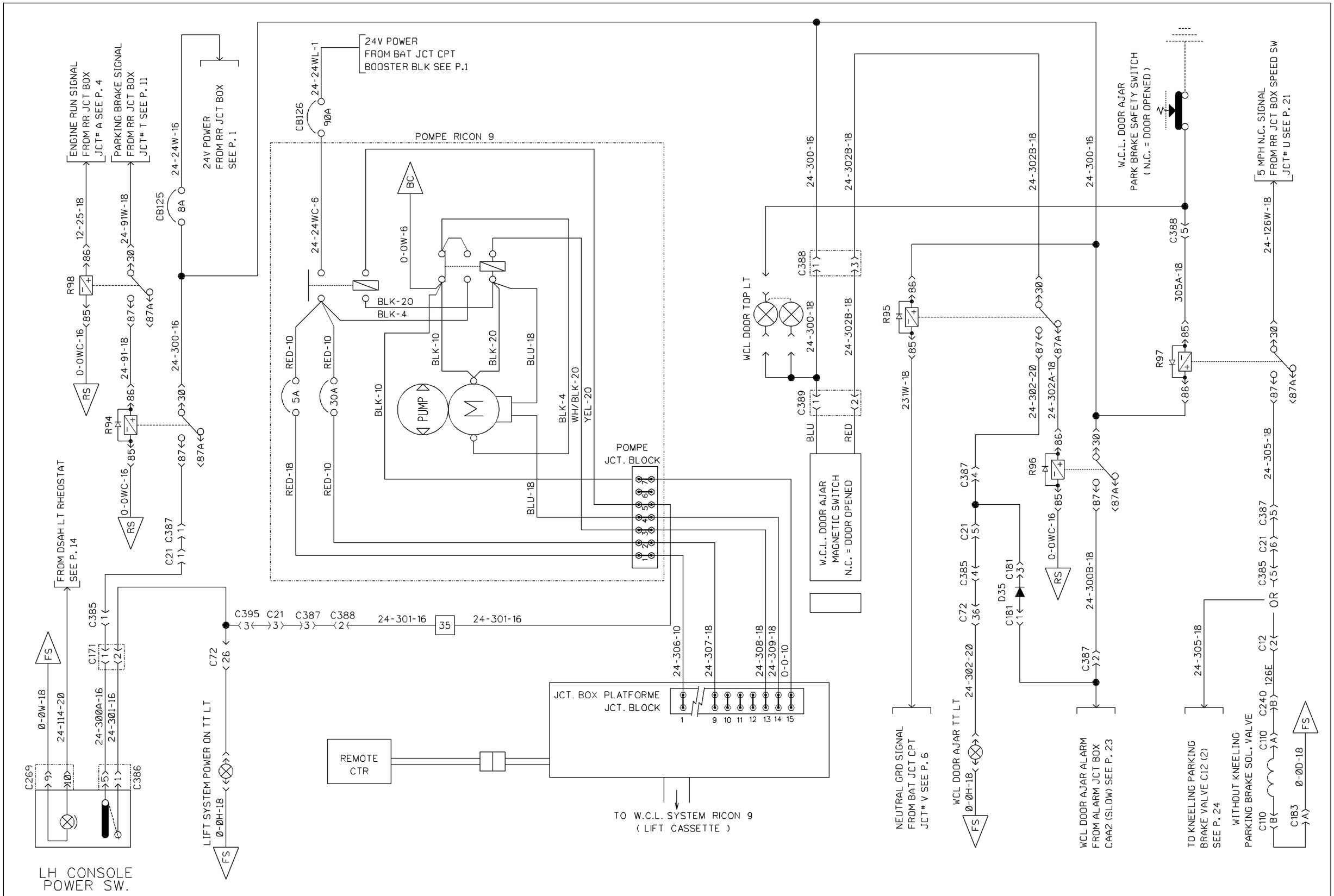

W.C.L. SYSTEM RICON 9

PREVOST CAR inc.	WIRING DIAGRAM	NO: D060869	P. 35	REVISION 012

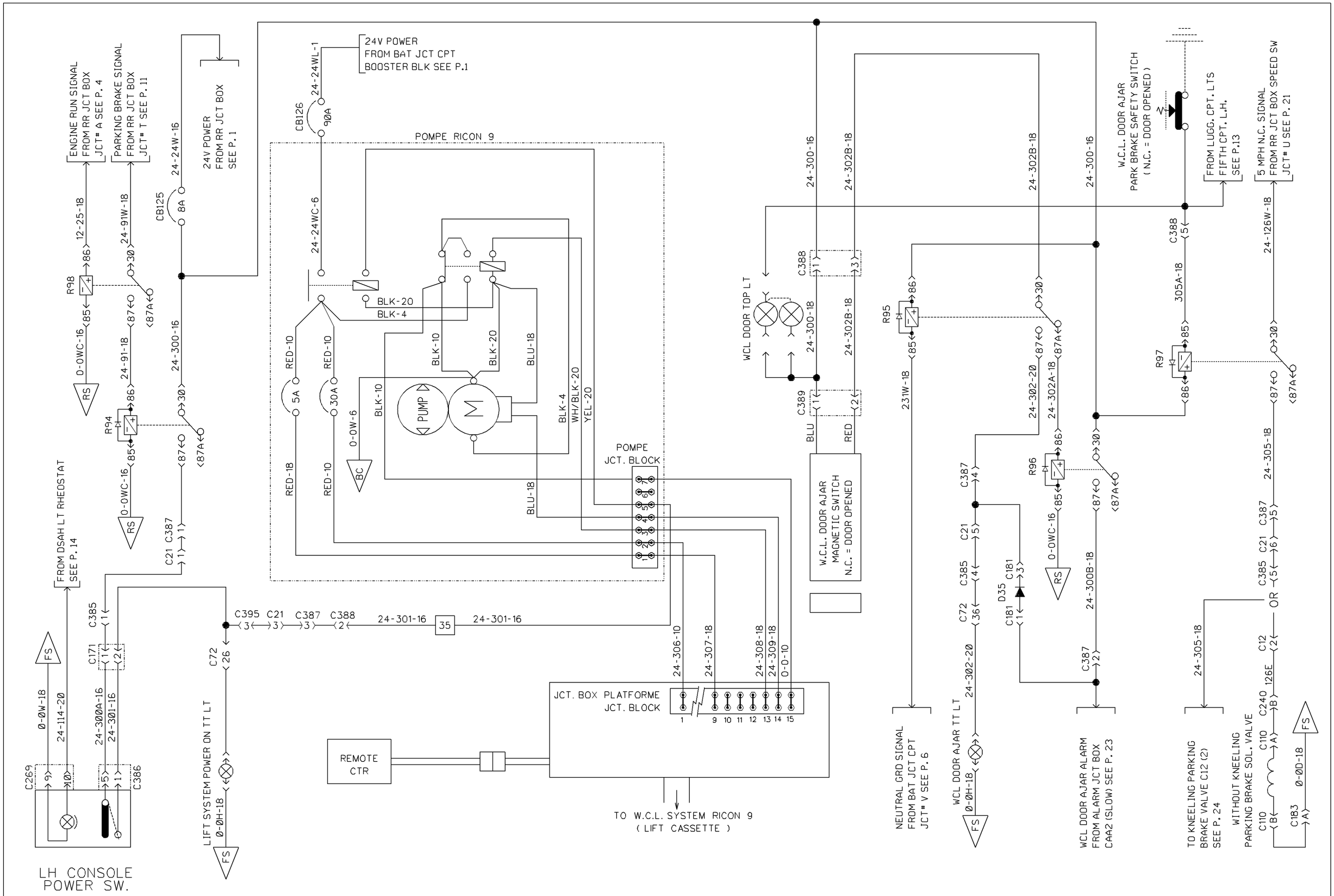

W.C.L. SYSTEM RICON 9

PREVOST CAR inc.	WIRING DIAGRAM	NO: D060869	P. 35	REVISION 017

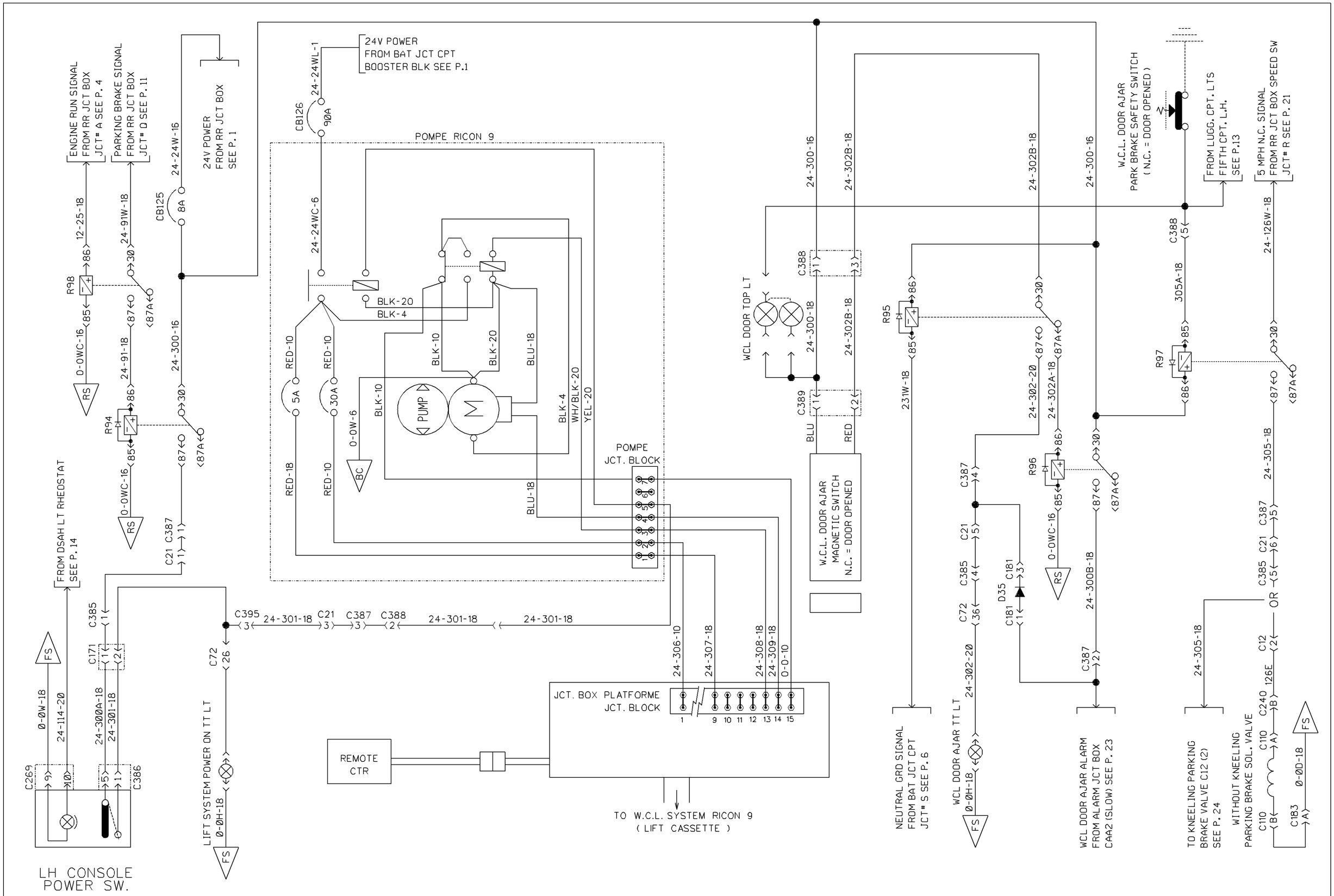

W.C.L. SYSTEM RICON 9

PREVOST CAR inc.	WIRING DIAGRAM	NO: D060869	P. 35	REVISION 021

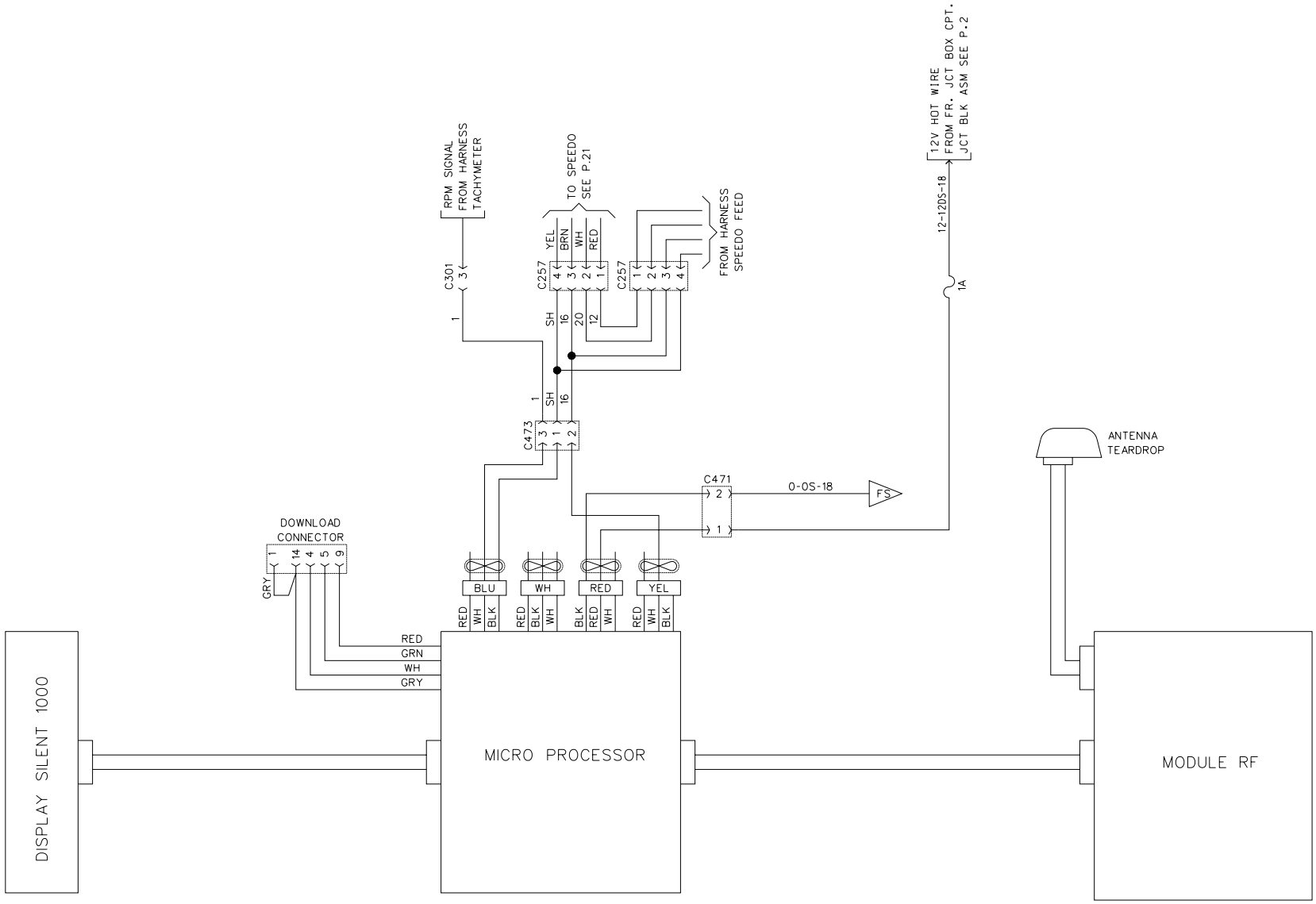

SILENT 1000 W/O FUEL CONSOMATION

PREVOST CAR inc.	WIRING DIAGRAM	NO: D060869	P. 36SP2	REVISION 000

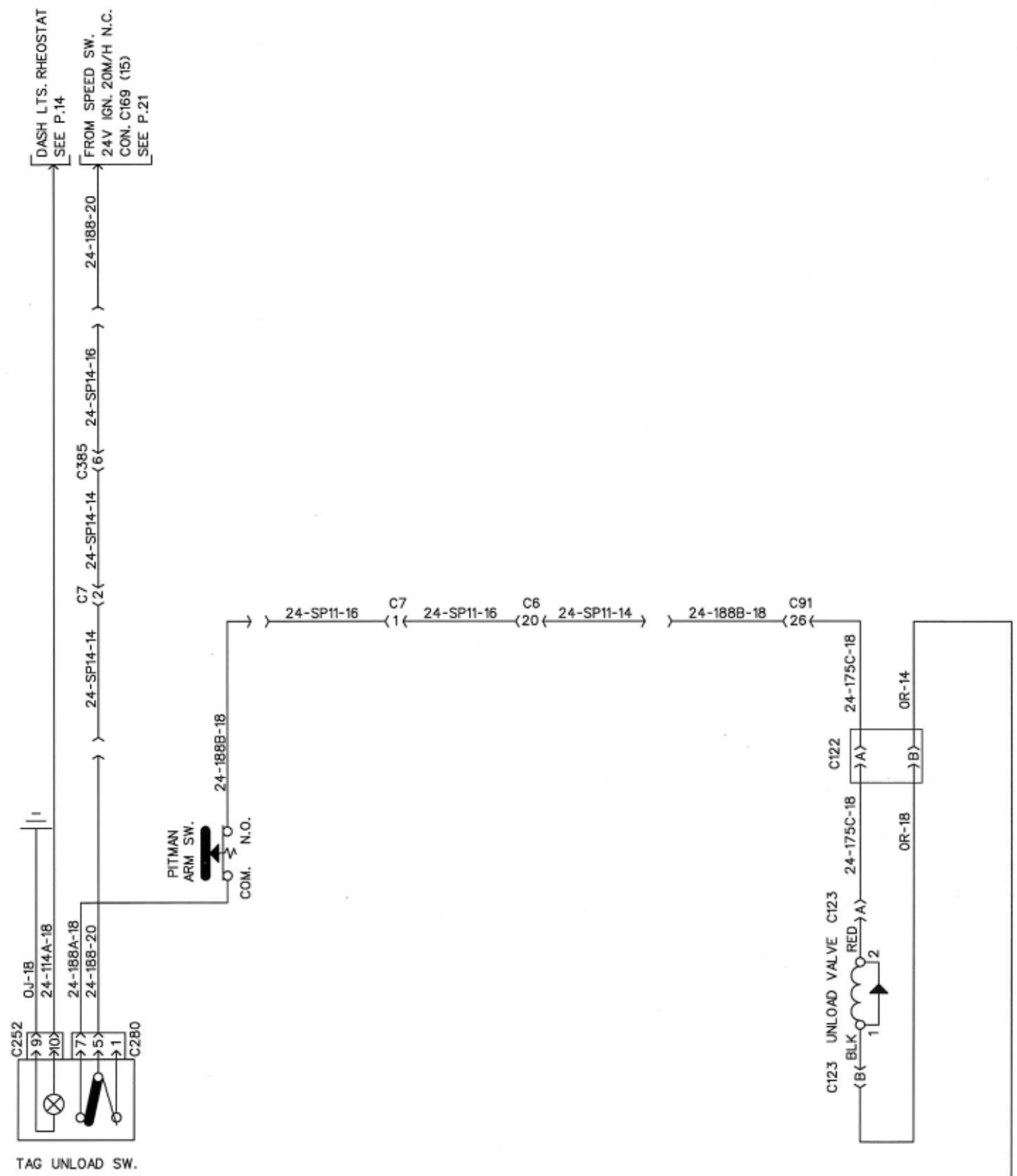

DELESTAGE DU TAG

PREVOST CAR inc.	WIRING DIAGRAM	NO: D060869	P. 37sp	REVISION 000